BRAKES

04
SECTION

ON-BOARD DIAGNOSTIC [ABS] 04-02A
ON-BOARD DIAGNOSTIC [DYNAMIC STABILITY CONTROL] 04-02B
SYMPTOM TROUBLESHOOTING 04-03
GENERAL PROCEDURES . . . 04-10
CONVENTIONAL BRAKE SYSTEM 04-11
PARKING BRAKE SYSTEM . . . 04-12
ANTILOCK BRAKE SYSTEM 04-13
DYNAMIC STABILITY CONTROL 04-15
TECHNICAL DATA 04-50
SERVICE TOOLS 04-60

04–02A ON-BOARD DIAGNOSTIC [ABS]

ABS SYSTEM WIRING DIAGRAM 04–02A–2
ON-BOARD DIAGNOSIS [ABS] 04–02A–2
DTC B1317, B1318 [ABS] 04–02A–5
DTC B1342, C1267 [ABS] 04–02A–6
DTC C1095 [ABS] 04–02A–7
DTC C1141, C1142, C1143, C1144, C1233, C1234, C1235, C1236 [ABS] 04–02A–8
DTC C1145, C1155, C1165, C1175 [ABS] 04–02A–11
DTC C1446 [ABS] 04–02A–12
DTC U1900, U2012 [ABS] 04–02A–14

ABS SYSTEM WIRING DIAGRAM

DPE040200000W01

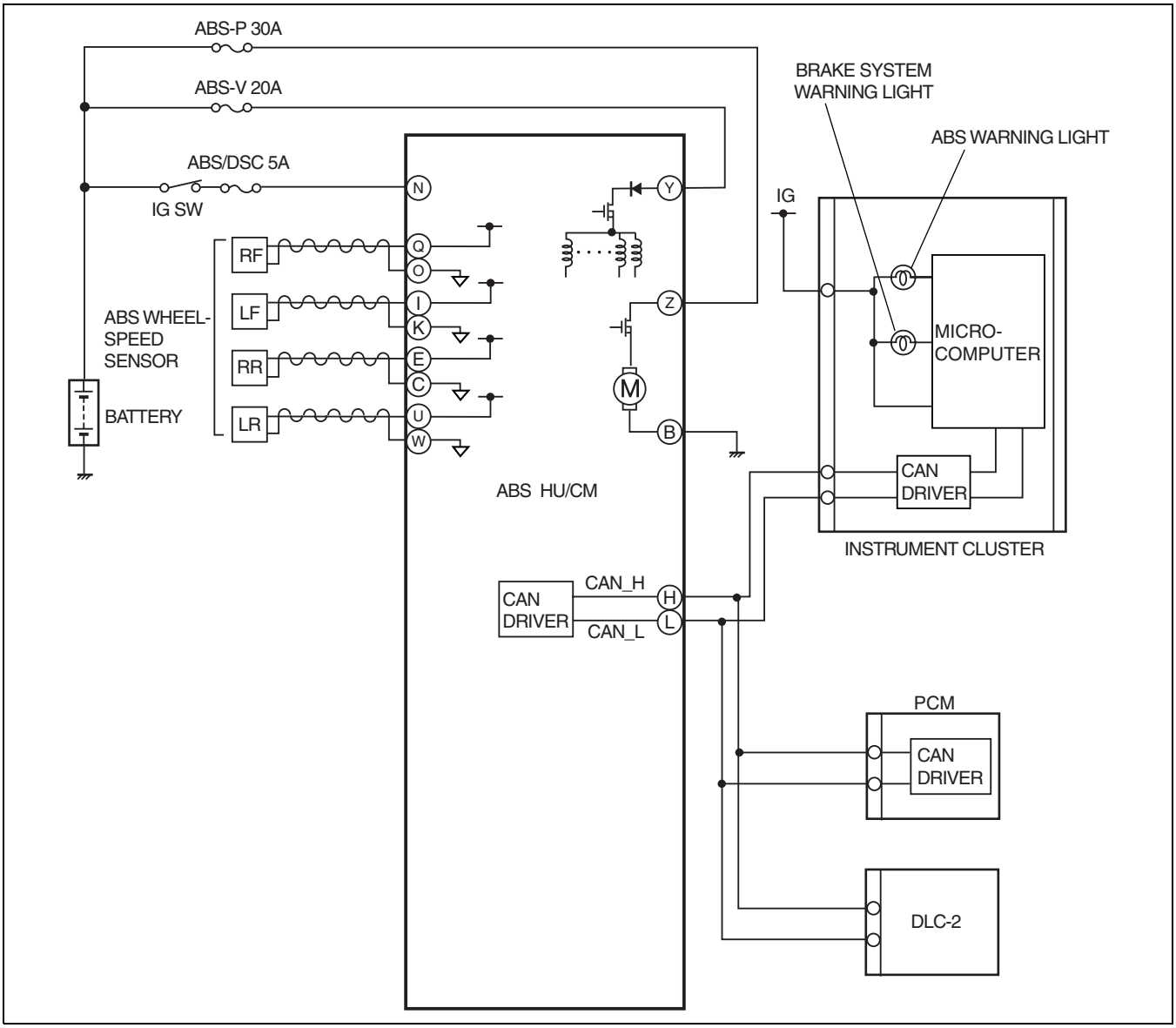

DPE402AW1001

ON-BOARD DIAGNOSIS [ABS]

DPE040200000W02

On-Board Diagnostic (OBD) Test Description

- The OBD test inspects the integrity and function of the ABS and outputs the results when requested by the specific tests.
- On-board diagnostic test also:
  — Provides a quick inspection of the ABS usually performed at the start of each diagnostic procedure.
  — Provides verification after repairs to ensure that no other faults occurred during service.
- The OBD test is divided into 3 tests:
  — Read/clear diagnostic results, PID monitor and record and active command modes.

Read/clear diagnostic results

- This function allows you to read or clear DTCs in the ABS HU/CM memory.

PID/Data monitor and record

- This function allows you to access certain data values, input signals, calculated values, and system status information.

Active command modes

- This function allows you to control devices through the WDS or equivalent.

Reading DTCs Procedure

1. Connect the WDS or equivalent to the vehicle DLC-2 connector.
2. Retrieve DTC using the WDS or equivalent.

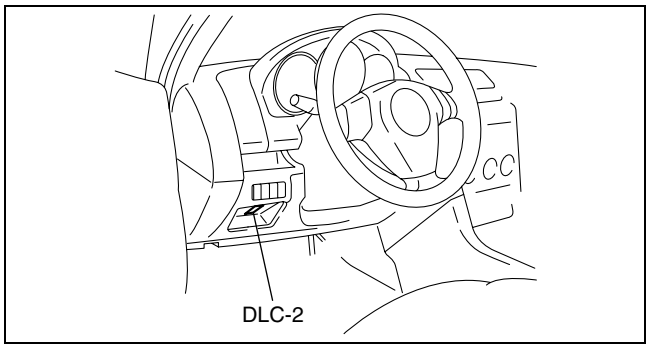

DPE402AW1005

Clearing DTCs Procedures

1. After repairs have been made, perform the **DTCs reading procedure**.
2. Erase DTC using the WDS or equivalent.
3. Ensure that the customer's concern has been resolved.

PID/Data Monitor and Record Procedure

1. Connect the WDS or equivalent to the vehicle DLC-2 connector.
2. Access and monitor PIDs using the WDS or equivalent.

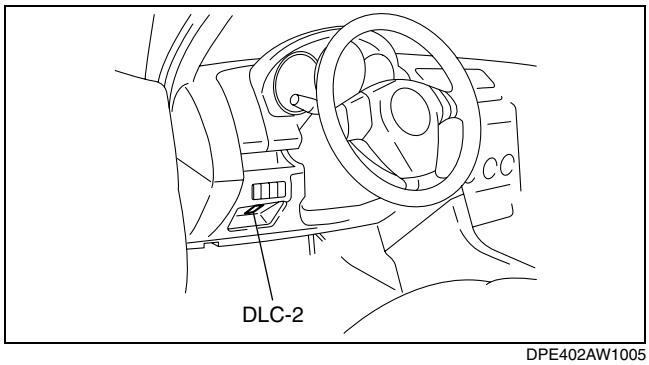

DPE402AW1005

Active Command Modes Procedure

1. Connect the WDS or equivalent to the vehicle DLC-2 16-pin connector.
2. Turn the ignition switch to the ON position (engine off) or start the engine.
3. Activate active command modes using the WDS or equivalent.

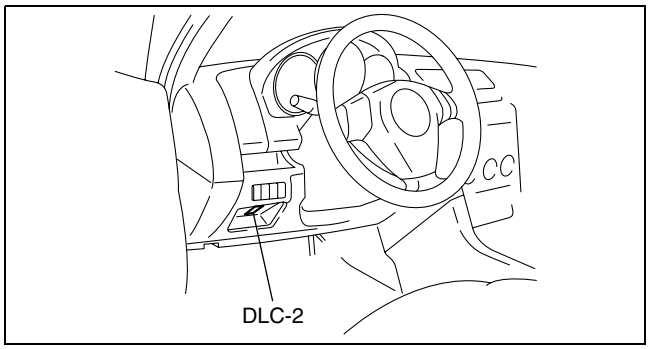

DPE402AW1005

DTC Table

DTC WDS or equivalent	System malfunction location	Page
B1317	Power supply system	(See 04–02A–5 DTC B1317, B1318 [ABS].)
B1318	Power supply system	(See 04–02A–5 DTC B1317, B1318 [ABS].)
B1342	ABS HU/CM (internal malfunction)	(See 04–02A–6 DTC B1342, C1267 [ABS].)
C1095	Pump motor, motor relay	(See 04–02A–7 DTC C1095 [ABS].)
C1141	LF ABS sensor rotor	(See 04–02A–8 DTC C1141, C1142, C1143, C1144, C1233, C1234, C1235, C1236 [ABS].)
C1142	RF ABS sensor rotor	(See 04–02A–8 DTC C1141, C1142, C1143, C1144, C1233, C1234, C1235, C1236 [ABS].)
C1143	LR ABS sensor rotor	(See 04–02A–8 DTC C1141, C1142, C1143, C1144, C1233, C1234, C1235, C1236 [ABS].)

DTC WDS or equivalent	System malfunction location	Page
C1144	RR ABS sensor rotor	(See 04–02A–8 DTC C1141, C1142, C1143, C1144, C1233, C1234, C1235, C1236 [ABS].)
C1145	RF ABS wheel-speed sensor	(See 04–02A–11 DTC C1145, C1155, C1165, C1175 [ABS].)
C1155	LF ABS wheel-speed sensor	(See 04–02A–11 DTC C1145, C1155, C1165, C1175 [ABS].)
C1165	RR ABS wheel-speed sensor	(See 04–02A–11 DTC C1145, C1155, C1165, C1175 [ABS].)
C1175	LR ABS wheel-speed sensor	(See 04–02A–11 DTC C1145, C1155, C1165, C1175 [ABS].)
C1233	LF ABS wheel-speed sensor/ABS sensor rotor	(See 04–02A–8 DTC C1141, C1142, C1143, C1144, C1233, C1234, C1235, C1236 [ABS].)
C1234	RF ABS wheel-speed sensor/ABS sensor rotor	(See 04–02A–8 DTC C1141, C1142, C1143, C1144, C1233, C1234, C1235, C1236 [ABS].)
C1235	RR ABS wheel-speed sensor/ABS sensor rotor	(See 04–02A–8 DTC C1141, C1142, C1143, C1144, C1233, C1234, C1235, C1236 [ABS].)
C1236	LR ABS wheel-speed sensor/ABS sensor rotor	(See 04–02A–8 DTC C1141, C1142, C1143, C1144, C1233, C1234, C1235, C1236 [ABS].)
C1267	ABS HU/CM (internal malfunction)	(See 04–02A–6 DTC B1342, C1267 [ABS].)
C1446	Brake switch	(See 04–02A–12 DTC C1446 [ABS].)
U1900	CAN line	(See 04–02A–14 DTC U1900, U2012 [ABS].)
U2012	CAN line	(See 04–02A–14 DTC U1900, U2012 [ABS].)

PID/DATA Monitor Table

PID name (definition)	Unit/Condition	Operation condition (reference)	Action	ABS HU/CM terminal
BOO_ABS (Brake pedal switch input)	On/Off	• Brake pedal depressed: On • Brake pedal released: Off	Inspect the brake switch.	—
CCNTABS (Number of continuous codes)	—	• DTCs detected: **1—255** • No DTCs detected: **0**	Perform the DTC inspection.	—
LF_WSPD (Left front ABS wheel-speed sensor input)	KPH, MPH	• Vehicle stopped: **0 KPH, 0 MPH** • Vehicle running: Vehicle speed	Inspect the ABS wheel-speed sensor.	I, K
LR_WSPD (Left rear ABS wheel-speed sensor input)	KPH, MPH	• Vehicle stopped: **0 KPH, 0 MPH** • Vehicle running: Vehicle speed	Inspect the ABS wheel-speed sensor.	U, W
RF_WSPD (Right front ABS wheel-speed sensor input)	KPH, MPH	• Vehicle stopped: **0 KPH, 0 MPH** • Vehicle running: Vehicle speed	Inspect the ABS wheel-speed sensor.	Q, O
RR_WSPD (Right rear ABS wheel-speed sensor input)	KPH, MPH	• Vehicle stopped: **0 KPH, 0 MPH** • Vehicle running: Vehicle speed	Inspect the ABS wheel-speed sensor.	E, C

Active Command Modes Table

Command name	Output part	Operation	Operating condition
LF_INLET	LF inlet solenoid valve	On/Off	Ignition switch at ON
LF_OUTLET	LF outlet solenoid valve		
LR_INLET	LR inlet solenoid valve		
LR_OUTLET	LR outlet solenoid valve		
PMP_MOTOR	Pump motor		
RF_INLET	RF inlet solenoid valve		
RF_OUTLET	RF outlet solenoid valve		
RR_INLET	RR inlet solenoid valve		
RR_OUTLET	RR outlet solenoid valve		

DTC B1317, B1318 [ABS]

DPE040200000W03

DTC B1317, B1318	Power supply system
DETECTION CONDITION	• B1317 — High ignition voltage (**16 V or more**) is detected at the voltage monitor of the solenoid valve or motor monitor. • B1318 — When driving the vehicle at **20 km/h {12.4 mph} or more**, low ignition voltage (**10 V or less**) is detected at the voltage monitor of the solenoid valve or motor monitor.
POSSIBLE CAUSE	• ABS 1 30A/ABS 2 20A/ABS IG 10A fuse malfunction • Open or short circuit in wiring harness between ABS HU/CM terminal N and battery • Open or short circuit in wiring harness between ABS HU/CM terminal Y and battery • Open or short circuit in wiring harness between ABS HU/CM terminal Z and battery • Open circuit in wiring harness between ABS HU/CM terminal B and body ground • Battery deterioration • Generator malfunction • Poor connection at connectors (female terminal)

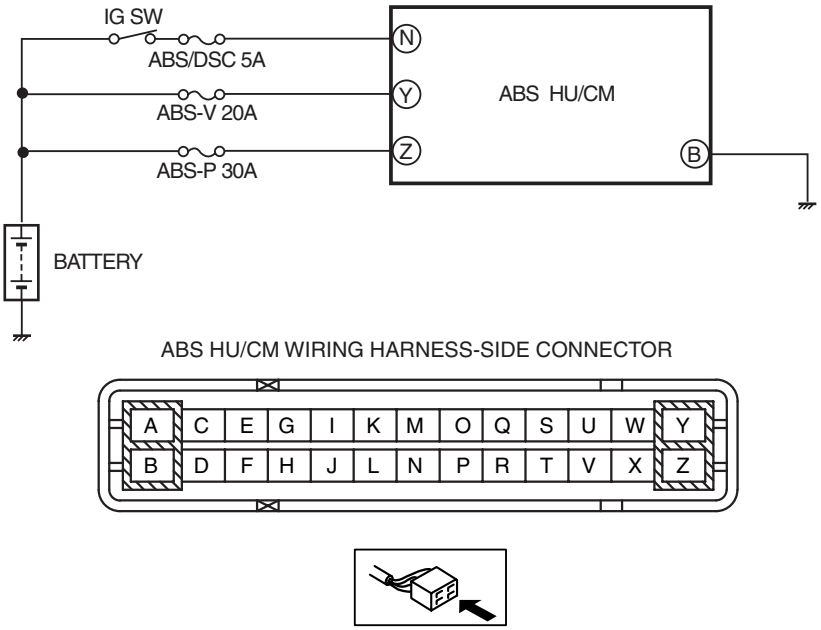

04

Diagnostic procedure

STEP	INSPECTION		ACTION
1	**INSPECT BATTERY VOLTAGE** • Is the battery positive terminal voltage normal?	Yes	Inspect for normal connection of the battery terminals. Go to the next step.
		No	Charge or replace the battery, then go to Step 6. (See 01–17B–3 BATTERY RECHARGING [MZR-CD (RF Turbo)].) (See 01–17A–6 BATTERY RECHARGING [L8, LF].) (See 01–17B–1 BATTERY REMOVAL/ INSTALLATION [MZR-CD (RF Turbo)].) (See 01–17A–1 BATTERY REMOVAL/ INSTALLATION [L8, LF].)
2	**INSPECT BATTERY GRAVITY** • Is battery specific gravity as specified?	Yes	Go to the next step.
		No	Replace the battery, then go to Step 6. (See 01–17B–1 BATTERY REMOVAL/ INSTALLATION [MZR-CD (RF Turbo)].) (See 01–17A–1 BATTERY REMOVAL/ INSTALLATION [L8, LF].)
3	**INSPECT CHARGING SYSTEM** • Are the generator and the drive belt tensions normal?	Yes	Go to the next step.
		No	Replace the generator and/or drive belt if necessary. (See 01–17B–4 GENERATOR REMOVAL/ INSTALLATION [MZR-CD (RF Turbo)].) (See 01–17A–7 GENERATOR REMOVAL/ INSTALLATION [L8, LF].) (See 01–10B–3 DRIVE BELT REPLACEMENT [MZR-CD (RF Turbo)].) (See 01–10A–3 DRIVE BELT REPLACEMENT [L8, LF].) Go to Step 6.
4	**INSPECT ABS HU/CM POWER SUPPLY FOR OPEN CIRCUIT** • Disconnect the ABS HU/CM connectors. • Turn the ignition switch to the ON position. • Measure the voltage between following connector terminals of the ABS HU/CM (vehicle harness-side) and body ground: — ABS HU/CM: N—Body ground — ABS HU/CM: Y—Body ground — ABS HU/CM: Z—Body ground • Is the voltage **10 V or more**?	Yes	Go to the next step.
		No	Repair or replace the wiring harness, then go to Step 6.
5	**INSPECT ABS HU/CM GROUND FOR POOR GROUND OR OPEN CIRCUIT** • Turn the ignition switch off. • Measure the resistance between following connector terminal of ABS HU/CM (vehicle harness-side) and body ground: — ABS HU/CM: B—Body ground • Is the resistance **within 0—1 ohm**?	Yes	Go to the next step.
		No	If there is open circuit: • Repair or replace the wiring harness, then go to the next step. If resistance is not within specification: • Repair or replace the poor ground part, then go to the next step.
6	**VERIFY THAT THE SAME DTC IS NOT PRESENT** • Reconnect all disconnected connectors. • Clear the DTCs from the memory. (See 04–02A–3 Clearing DTCs Procedures.) • Start the engine and drive the vehicle at **20 km/h {12.4 mph} or more**. • Are the same DTCs present?	Yes	Repeat the inspection from Step 1. If the malfunction recurs, replace the ABS HU/CM, then go to the next step. (See 04–13–2 ABS HU/CM REMOVAL/ INSTALLATION)
		No	Go to the next step.
7	**VERIFY THAT NO OTHER DTCS ARE PRESENT** • Are any other DTCs output?	Yes	Go to the applicable DTC inspection. (See 04–02A–3 DTC Table.)
		No	DTC troubleshooting completed.

DTC B1342, C1267 [ABS]

DPE040200000W04

DTC B1342, C1267	ABS HU/CM (internal malfunction)
DETECTION CONDITION	• The ABS HU/CM on-board diagnostic function detects control module internal malfunction.

POSSIBLE CAUSE	• ABS HU/CM internal malfunction

Diagnostic procedure

STEP	INSPECTION		ACTION
1	**VERIFY NO ABS HU/CM MALFUNCTION** • Clear the DTCs from the memory. (See 04–02A–3 Clearing DTCs Procedures.) • Start the engine and drive the vehicle at **10 km/h {6.2 mph} or more**. • Are the same DTCs present?	Yes	Replace the ABS HU/CM, then go to the next step. (See 04–13–2 ABS HU/CM REMOVAL/ INSTALLATION.)
		No	Go to the next step.
2	**VERIFY THAT NO OTHER DTCS ARE PRESENT** • Are any other DTCs output?	Yes	Go to the applicable DTC inspection. (See 04–02A–3 DTC Table.)
		No	DTC troubleshooting completed.

DTC C1095 [ABS]

DPE040200000W05

DTC C1095	Pump motor, motor relay
DETECTION CONDITION	• ABS motor monitor signal does not correspond to ABS HU/CM OFF signal. • ABS motor monitor signal does not correspond to ABS HU/CM ON signal. • ABS motor monitor OFF signal is input within specified time limit when motor signal is switched from ON to OFF by ABS HU/CM.
POSSIBLE CAUSE	• ABS-P (30 A) fuse malfunction • Open circuit or short to ground in the wiring harness between the battery and ABS HU/CM terminal Z • Open circuit in the wiring harness between ABS HU/CM terminal B and body ground • Open or short circuit in ABS HU/CM internal motor relay, or stuck motor relay • Open or short circuit in ABS HU/CM internal pump motor, or frozen pump motor • Poor connection at connectors (female terminal)

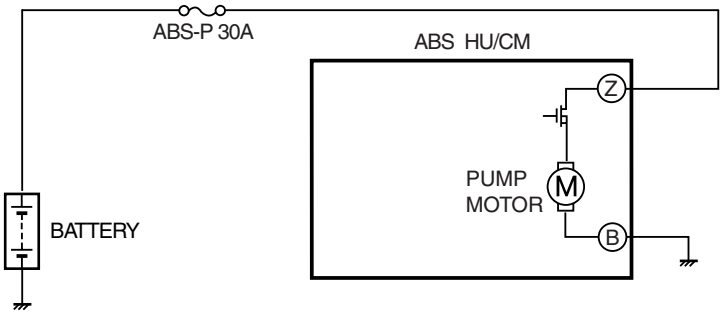

ABS HU/CM WIRING HARNESS-SIDE CONNECTOR

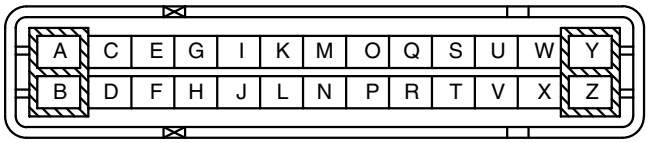

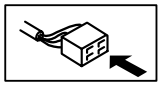

Diagnostic procedure

STEP	INSPECTION		ACTION
1	**INSPECT ABS FUSE CONDITION** • Is the ABS fuse (ABS-P 30 A) normal?	Yes	Go to the next step.
		No	Replace the ABS fuse, then go to Step 6.
2	**VERIFY PUMP MOTOR OPERATION** • Turn the ignition switch off. • Connect the WDS or equivalent to the DLC-2. • Turn the ignition switch to the ON position. • Access PMP _MOTOR active command modes using the WDS or equivalent. • Does the pump motor operate?	Yes	Go to the next step.
		No	Replace the ABS HU/CM, then go to Step 6. (See 04–13–2 ABS HU/CM REMOVAL/ INSTALLATION.)
3	**INSPECT MOTOR RELAY POWER SUPPLY FOR OPEN CIRCUIT** • Turn the ignition switch off. • Disconnect the ABS HU/CM connector. • Inspect for continuity between ABS HU/CM terminal Z and the positive battery terminal. • Is there continuity?	Yes	Go to the next step.
		No	Repair or replace the wiring harness, then go to Step 6.
4	**INSPECT MOTOR RELAY POWER SUPPLY FOR SHORT CIRCUIT** • Inspect for continuity between ABS HU/CM terminal Z and body ground. • Is there continuity?	Yes	Repair or replace the wiring harness, then go to Step 6.
		No	Go to the next step.
5	**INSPECT PUMP MOTOR GROUND FOR OPEN CIRCUIT** • Inspect for continuity between ABS HU/CM terminal B and body ground. • Is there continuity?	Yes	Go to the next step.
		No	Repair or replace the wiring harness, then go to the next step.
6	**VERIFY THAT THE SAME DTC IS NOT PRESENT** • Reconnect all disconnected connectors. • Clear the DTCs from the memory. (See 04–02A–3 Clearing DTCs Procedures.) • Start the engine and drive the vehicle at **10 km/h {6.2 mph} or more**. • Are the same DTCs present?	Yes	Repeat the inspection from Step 1. If the malfunction recurs, replace the ABS HU/CM, then go to the next step. (See 04–13–2 ABS HU/CM REMOVAL/ INSTALLATION.)
		No	Go to the next step.
7	**VERIFY THAT NO OTHER DTCS ARE PRESENT** • Are any other DTCs output?	Yes	Go to the applicable DTC inspection. (See 04–02A–3 DTC Table.)
		No	DTC troubleshooting completed.

DTC C1141, C1142, C1143, C1144, C1233, C1234, C1235, C1236 [ABS]

DPE040200000W06

Note

- When only the driving wheels are rotated while the vehicle is jacked up, DTCs C1235 and C1236 are input to the memory.

DTC	C1141, C1142, C1143, C1144, C1233, C1234, C1235, C1236	ABS wheel-speed sensor/ABS sensor rotor
DETECTION CONDITION	• C1141, C1142, C1143, C1144 — Periodic abnormality is detected in the signal wave pattern from the ABS wheel-speed sensors. • C1234, C1233, C1235, C1236 — Wheel speed signal is not input or extremely low wheel speed signal is input from any of the four wheels when driving at a vehicle speed of **10 km/h {6.2 mph} or more**. — A large, sudden change in wheel speed signal is detected. — ABS control operates for **28 s or more**.	
POSSIBLE CAUSE	• ABS wheel-speed sensor malfunction • ABS sensor rotor malfunction (foreign material adhering) • Improper installation of ABS wheel-speed sensor and/or sensor rotor • Excessive clearance between the ABS wheel-speed sensor and sensor rotor • Continuous ABS operation	

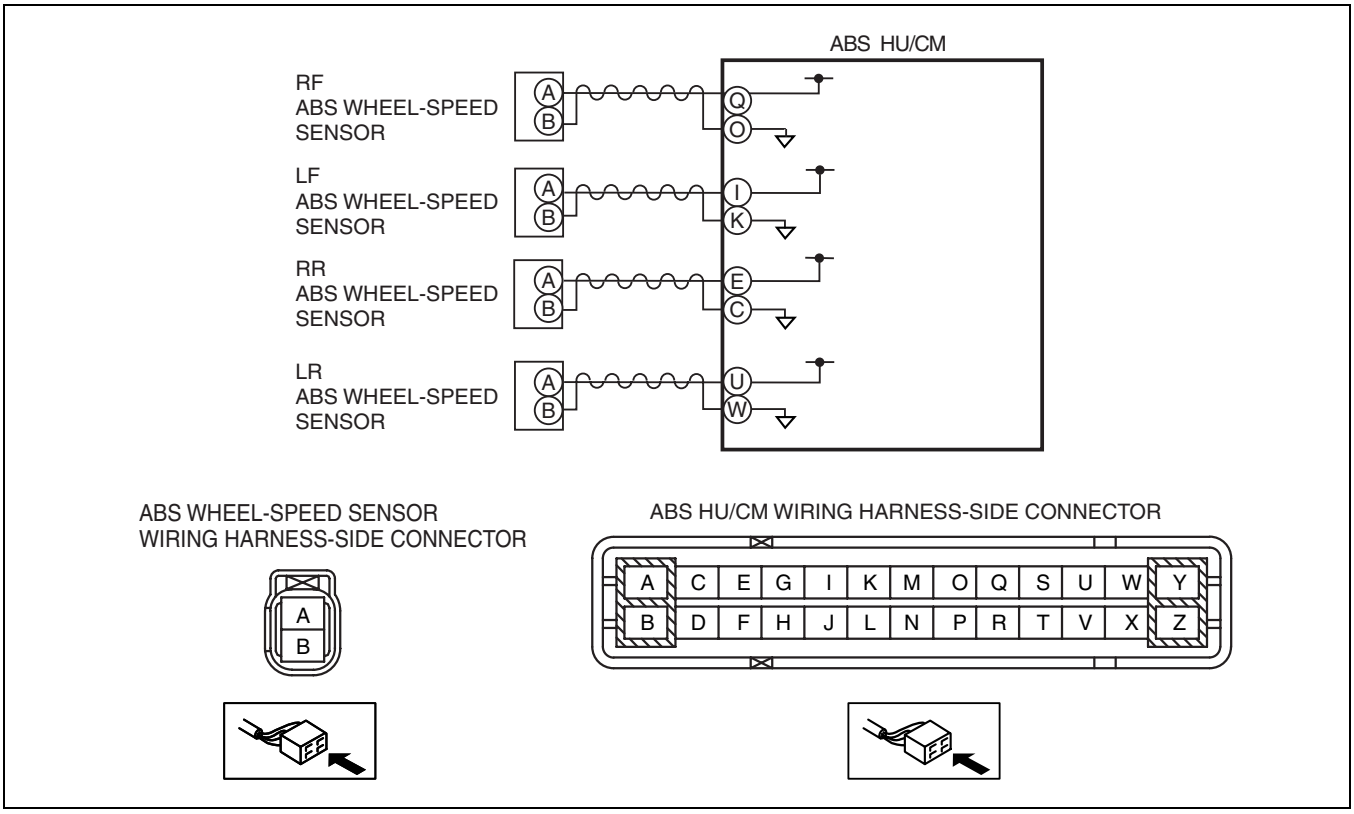
ABS HU/CM
RF
ABS WHEEL-SPEED
SENSOR
LF
ABS WHEEL-SPEED
SENSOR
RR
ABS WHEEL-SPEED
SENSOR
LR
ABS WHEEL-SPEED
SENSOR
A
B
Q
O
I
K
E
C
U
W
ABS WHEEL-SPEED SENSOR
WIRING HARNESS-SIDE CONNECTOR
ABS HU/CM WIRING HARNESS-SIDE CONNECTOR
A C E G I K M O Q S U W Y
B D F H J L N P R T V X Z

Diagnostic procedure

STEP	INSPECTION		ACTION
1	**INSPECT PID FOR ABS WHEEL-SPEED SENSOR OUTPUT ERROR USING WDS OR EQUIVALENT** • Turn the ignition switch off. • Connect the WDS or equivalent to the DLC-2. • Select the following PIDs using the WDS or equivalent: LF_WSPD LR_WSPD RF_WSPD RR_WSPD • Drive the vehicle. • Verify that the vehicle speeds detected by the four ABS wheel-speed sensors are approximately the same. • Are the vehicle speeds approximately the same?	Yes	Go to Step 3.
		No	Go to the next step.
2	**INSPECT FOR SHORT TO GROUND BETWEEN ABS WHEEL-SPEED SENSOR CONNECTORS AND GROUND** • Disconnect the ABS wheel-speed sensor connectors. • Inspect for no continuity between the following ABS wheel-speed sensor connector terminals (vehicle harness-side) and body ground: — ABS wheel-speed sensor (RF): B—Body ground — ABS wheel-speed sensor (LF): B—Body ground — ABS wheel-speed sensor (RR): B—Body ground — ABS wheel-speed sensor (LR): B—Body ground • Is the continuity normal?	Yes	Go to the next step.
		No	Repair or replace the wiring harness, then go to Step 6.
3	**INSPECT IF MALFUNCTION OCCURRED DUE TO IMPROPER SENSOR CLEARANCE.** • Inspect the clearance between the ABS wheel-speed sensor and the ABS sensor rotor. (See 04–13–6 FRONT ABS WHEEL-SPEED SENSOR INSPECTION.) (See 04–13–8 REAR ABS WHEEL-SPEED SENSOR INSPECTION.) • Is the clearance normal? **Clearance** **Front: 2.1 mm {0.082 in} or less** **Rear: 1.46 mm {0.057 in} or less**	Yes	Go to the next step.
		No	Replace the ABS wheel-speed sensor, then go to Step 6. (See 04–13–6 FRONT ABS WHEEL-SPEED SENSOR REMOVAL/INSTALLATION.) (See 04–13–7 REAR ABS WHEEL-SPEED SENSOR REMOVAL/INSTALLATION.)
4	**VISUALLY INSPECT ABS SENSOR ROTOR FOR FOREIGN MATERIAL ADHERING OR IMPROPER INSTALLATION** • Is the result normal?	Yes	Go to Step 6.
		No	Replace the wheel hub component, then go to Step 6. (See 03–11–2 WHEEL HUB, STEERING KNUCKLE REMOVAL/INSTALLATION.) (See 03–12–2 WHEEL HUB COMPONENT REMOVAL/INSTALLATION.)
5	**INSPECT IF MALFUNCTION OCCURRED DUE TO INTERNAL MALFUNCTION OF HYDRAULIC UNIT (CLOGGING IN PIPING)** • Perform the ABS system operation inspection. (See 04–13–2 ABS SYSTEM INSPECTION.) • Is the system normal?	Yes	Go to the next step.
		No	Replace the hydraulic unit, then go to the next step. (See 04–13–2 ABS HU/CM REMOVAL/INSTALLATION.)
6	**VERIFY THAT THE SAME DTC IS NOT PRESENT** • Clear the DTCs from the memory. (See 04–02A–3 Clearing DTCs Procedures.) • Start the engine and drive the vehicle at **10 km/h {6.2 mph} or more**. • Are the same DTCs present?	Yes	Repeat the inspection from Step 1. If the malfunction recurs, replace the ABS HU/CM, then go to the next step. (See 04–13–2 ABS HU/CM REMOVAL/INSTALLATION.)
		No	Go to the next step.

STEP	INSPECTION		ACTION
7	**VERIFY THAT NO OTHER DTCS ARE PRESENT** • Are any other DTCs output?	Yes	Go to the applicable DTC inspection. (See 04–02A–3 DTC Table.)
		No	DTC troubleshooting completed.

DTC C1145, C1155, C1165, C1175 [ABS]

DPE040200000W07

DTC C1145, C1155, C1165, C1175	ABS wheel-speed sensor
DETECTION CONDITION	• Open circuit or short to ground has been detected in the ABS wheel-speed sensor wiring harness on any of the four vehicle wheels.
POSSIBLE CAUSE	• Open circuit or short to ground in the wiring harness between the following ABS HU/CM terminals and ABS wheel-speed sensor terminals: — ABS HU/CM terminal Q—RF ABS wheel-speed sensor terminal A — ABS HU/CM terminal O—RF ABS wheel-speed sensor terminal B — ABS HU/CM terminal I—LF ABS wheel-speed sensor terminal A — ABS HU/CM terminal K—LF ABS wheel-speed sensor terminal B — ABS HU/CM terminal E—RR ABS wheel-speed sensor terminal A — ABS HU/CM terminal C—RR ABS wheel-speed sensor terminal B — ABS HU/CM terminal U—LR ABS wheel-speed sensor terminal A — ABS HU/CM terminal W—LR ABS wheel-speed sensor terminal B • ABS wheel-speed sensor malfunction • Poor connection at connectors (female terminal)

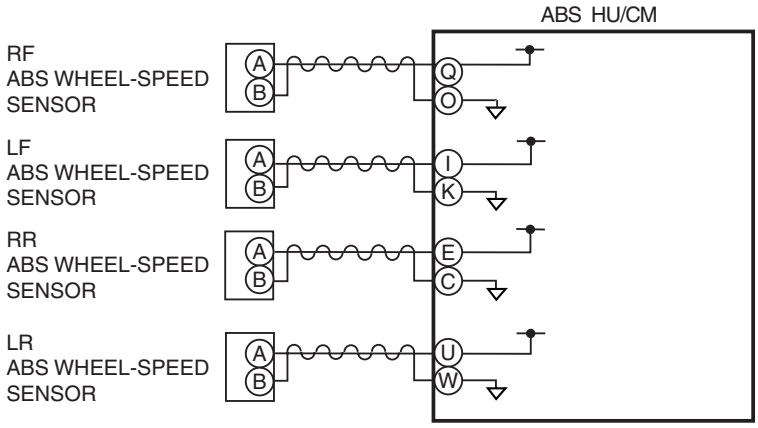

ABS WHEEL-SPEED SENSOR
WIRING HARNESS-SIDE CONNECTOR

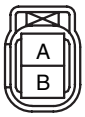

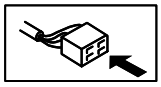

ABS HU/CM WIRING HARNESS-SIDE CONNECTOR

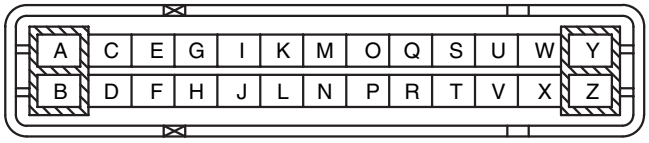

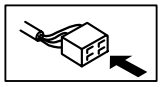

04

Diagnostic procedure

STEP	INSPECTION		ACTION
1	**INSPECT ABS WHEEL-SPEED SENSOR FOR SHORT TO GROUND** • Turn the ignition switch off. • Disconnect the ABS HU/CM connectors. • Inspect for continuity between the following ABS HU/CM connector terminals (vehicle harness-side) and body ground: — RF ABS wheel-speed sensor(+): Q — RF ABS wheel-speed sensor(-): O — LF ABS wheel-speed sensor(+): I — LF ABS wheel-speed sensor(-): K — RR ABS wheel-speed sensor(+): E — RR ABS wheel-speed sensor(-): C — LR ABS wheel-speed sensor(+): U — LR ABS wheel-speed sensor(-): W • Is there continuity?	Yes	Go to the next step.
		No	Go to Step 3.
2	**INSPECT ABS WHEEL-SPEED SENSOR WIRING HARNESS FOR SHORT TO GROUND** • Disconnect the ABS wheel-speed sensor connectors. • Inspect for continuity between the following ABS HU/CM connector terminals (vehicle harness-side) and body ground: — RF ABS wheel-speed sensor(+): Q — RF ABS wheel-speed sensor(-): O — LF ABS wheel-speed sensor(+): I — LF ABS wheel-speed sensor(-): K — RR ABS wheel-speed sensor(+): E — RR ABS wheel-speed sensor(-): C — LR ABS wheel-speed sensor(+): U — LR ABS wheel-speed sensor(-): W • Is there continuity?	Yes	Repair or replace the wiring harness, then go to Step 4.
		No	Replace the ABS wheel-speed sensor, then go to Step 4. (See 04–13–6 FRONT ABS WHEEL-SPEED SENSOR REMOVAL/INSTALLATION.) (See 04–13–7 REAR ABS WHEEL-SPEED SENSOR REMOVAL/INSTALLATION.)
3	**INSPECT FOR OPEN CIRCUIT IN ABS WHEEL-SPEED SENSOR WIRING HARNESS** • Inspect for continuity between the ABS HU/CM connectors (vehicle harness-side) and the following vehicle harness-side connector terminals of the ABS wheel-speed sensors: — RF ABS wheel-speed sensor(+): Q—A — RF ABS wheel-speed sensor(-): O—B — LF ABS wheel-speed sensor(+): I—A — LF ABS wheel-speed sensor(-): K—B — RR ABS wheel-speed sensor(+): E—A — RR ABS wheel-speed sensor(-): C—B — LR ABS wheel-speed sensor(+): U—A — LR ABS wheel-speed sensor(-): W—B • Is there continuity?	Yes	Go to the next step.
		No	Replace the ABS wheel-speed sensor, then go to the next step. (See 04–13–6 FRONT ABS WHEEL-SPEED SENSOR REMOVAL/INSTALLATION.) (See 04–13–7 REAR ABS WHEEL-SPEED SENSOR REMOVAL/INSTALLATION.)
4	**VERIFY THAT THE SAME DTC IS NOT PRESENT** • Reconnect all disconnected connectors. • Clear the DTCs from the memory. (See 04–02A–3 Clearing DTCs Procedures.) • Are the same DTCs present?	Yes	Repeat the inspection from Step 1. If the malfunction recurs, replace the ABS HU/CM, then go to the next step. (See 04–13–2 ABS HU/CM REMOVAL/INSTALLATION.)
		No	Go to the next step.
5	**VERIFY THAT NO OTHER DTCS ARE PRESENT** • Are any other DTCs output?	Yes	Go to the applicable DTC inspection. (See 04–02A–3 DTC Table.)
		No	DTC troubleshooting completed.

DTC C1446 [ABS]

DPE040200000W08

DTC C1446	Brake switch
DETECTION CONDITION	• Brake switch ON signal is input for **6 min or more** when driving at a vehicle speed of **20 km/h {12.4 mph} or more**. • Brake switch ON signal is not input even though the control module determines vehicle deceleration.

POSSIBLE CAUSE	• Open or short circuit in wiring harness between the brake switch and PCM terminal • Brake switch malfunction • Poor connection at connectors (female terminal)

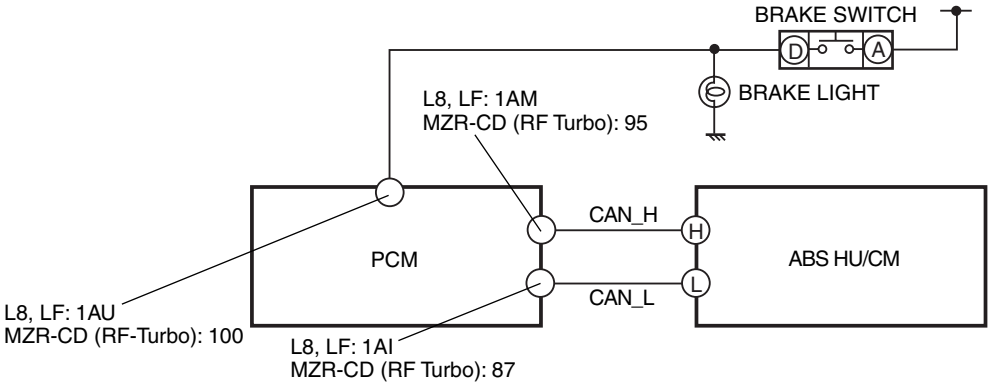

ABS HU/CM WIRING HARNESS-SIDE CONNECTOR

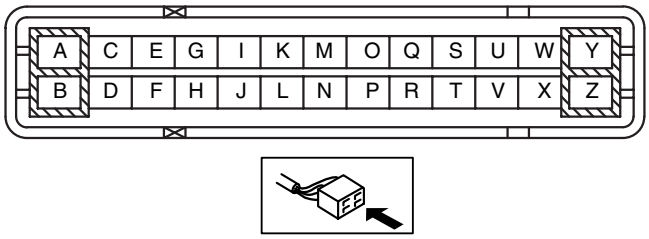

BRAKE SWITCH WIRING HARNESS-SIDE CONNECTOR

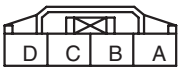

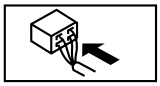

PCM (L8, LF) WIRING HARNESS-SIDE CONNECTOR

2BE	2BA	2AW	2AS	2AO	2AK	2AG	2AC	2Y	2U	2Q	2M	2I	2E	2A
2BF	2BB	2AX	2AT	2AP	2AL	2AH	2AD	2Z	2V	2R	2N	2J	2F	2B
2BG	2BC	2AY	2AU	2AQ	2AM	2AI	2AE	2AA	2W	2S	2O	2K	2G	2C
2BH	2BD	2AZ	2AV	2AR	2AN	2AJ	2AF	2AB	2X	2T	2P	2L	2H	2D

1BE	1BA	1AW	1AS	1AO	1AK	1AG	1AC	1Y	1U	1Q	1M	1I	1E	1A
1BF	1BB	1AX	1AT	1AP	1AL	1AH	1AD	1Z	1V	1R	1N	1J	1F	1B
1BG	1BC	1AY	1AU	1AQ	1AM	1AI	1AE	1AA	1W	1S	1O	1K	1G	1C
1BH	1BD	1AZ	1AV	1AR	1AN	1AJ	1AF	1AB	1X	1T	1P	1L	1H	1D

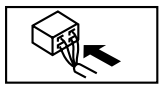

PCM (MZR-CD (RF Turbo)) WIRING HARNESS-SIDE CONNECTOR

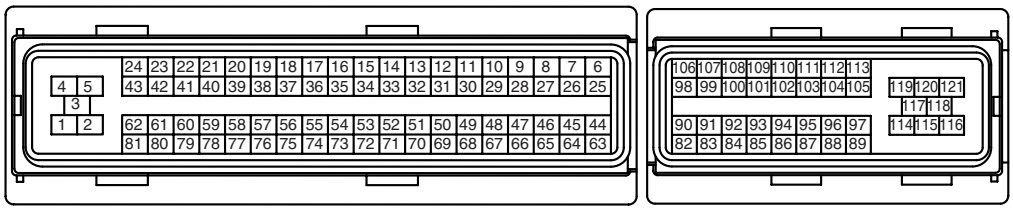

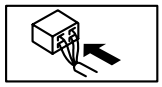

Diagnostic procedure

STEP	INSPECTION		ACTION
1	**VERIFY OPEN OR SHORT CIRCUIT IN BRAKE SWITCH SIGNAL** • Turn the ignition switch to the ON position. • Measure the voltage between the following PCM terminals and body ground when the brake pedal is depressed and released: — PCM (L8,LF): 1AU—Body ground — PCM (MZR-CD (RF Turbo)): 100—Body ground **Voltage** **Brake pedal depressed: B+** **Brake pedal released:** **1 V or less**	Yes	Go to Step 5.
		No	If it is **B+** under any condition, then go to the next step. If it is **1 V or less** under any condition, then go to Step 4.
2	**INSPECT BRAKE SWITCH SIGNAL FOR SHORT TO POWER SUPPLY CIRCUIT** • Disconnect the PCM connectors. • Disconnect the brake switch connector. • Measure voltage between the brake switch connector terminal D (vehicle harness-side) and body ground. • Is the voltage **1 V or less**?	Yes	Replace the brake switch, then go to Step 4. (See 04–11–6 BRAKE PEDAL REMOVAL/ INSTALLATION [L.H.D.].) (See 04–11–8 BRAKE PEDAL REMOVAL/ INSTALLATION [R.H.D.].)
		No	Repair or replace the wiring harness between the PCM and brake switch, then go to Step 4
3	**INSPECT BRAKE SWITCH SIGNAL FOR OPEN CIRCUIT** • Disconnect the PCM connectors. • Disconnect the brake switch connector. • Inspect continuity between the following PCM connector terminals (vehicle harness-side) and brake switch terminal D: — PCM (L8, LF): 1AU — PCM (MZR-CD (RF Turbo)): 100 • Is there continuity?	Yes	Replace the brake switch, then go to the next step. (See 04–11–6 BRAKE PEDAL REMOVAL/ INSTALLATION [L.H.D.].) (See 04–11–8 BRAKE PEDAL REMOVAL/ INSTALLATION [R.H.D.].)
		No	Repair or replace the wiring harness between the PCM and brake switch, then go to the next step.
4	**VERIFY THAT THE SAME DTC IS NOT PRESENT** • Reconnect all disconnected connectors. • Clear the DTCs from the memory. (See 04–02A–3 Clearing DTCs Procedures.) • Start the engine and drive the vehicle at **20 km/h {12.4 mph} or more**. • Are the same DTCs present?	Yes	Repeat the inspection from Step 1. If the malfunction recurs, replace the ABS HU/CM, then go to the next step. (See 04–13–2 ABS HU/CM REMOVAL/ INSTALLATION.)
		No	Go to the next step.
5	**VERIFY THAT NO OTHER DTCS ARE PRESENT** • Are any other DTCs output?	Yes	Go to the applicable DTC inspection. (See 04–02A–3 DTC Table.)
		No	DTC troubleshooting completed.

DTC U1900, U2012 [ABS]

DPE040200000W10

DTC U1900, U2012	CAN line
DETECTION CONDITION	• U1900 — Communication error with PCM is detected in CAN communication. • U2012 — CAN system wiring harness open or short circuit is detected.
POSSIBLE CAUSE	• CAN system wiring harness open or short circuit with PCM • PCM malfunction

Diagnostic procedure

- Inspect according to diagnostic procedure in Section 09. (See 09–02–5 DTC TABLE [MULTIPLEX COMMUNICATION SYSTEM].)

04–03 SYMPTOM TROUBLESHOOTING

SYSTEM WIRING DIAGRAM 04–03–2
FOREWORD 04–03–3
PRECAUTION 04–03–3
SYMPTOM TROUBLESHOOTING 04–03–7
NO.1 NEITHER ABS WARNING LIGHT NOR BRAKE SYSTEM WARNING LIGHT ILLUMINATE WHEN THE IGNITION SWITCH IS TURNED TO THE ON POSITION 04–03–9
NO.2 ABS WARNING LIGHT DOES NOT ILLUMINATE WHEN THE IGNITION SWITCH IS TURNED TO THE ON POSITION 04–03–10
NO.3 BRAKE SYSTEM WARNING LIGHT DOES NOT ILLUMINATE WHEN THE IGNITION SWITCH IS TURNED TO THE ON POSITION . . . 04–03–10
NO.4 BOTH ABS WARNING LIGHT AND BRAKE SYSTEM WARNING LIGHT STAY ON 4 S OR MORE WHEN THE IGNITION SWITCH IS TURNED TO THE ON POSITION 04–03–10
NO.5 ABS WARNING LIGHT STAYS ON 4 S OR MORE WHEN THE IGNITION SWITCH IS TURNED TO THE ON POSITION 04–03–12
NO.6 BRAKE SYSTEM WARNING LIGHT STAYS ON 4 S OR MORE WHEN THE IGNITION SWITCH IS TURNED TO THE ON POSITION (PARKING BRAKE IS RELEASED) 04–03–13
NO.7 THERE IS MALFUNCTION IN THE SYSTEM EVEN THOUGH ABS WARNING LIGHT, BRAKE SYSTEM WARNING LIGHT, DO NOT ILLUMINATE. 04–03–15
NO.8 ANY OF THE FOLLOWING LIGHTS DO NOT ILLUMINATE WHEN THE IGNITION SWITCH IS TURNED TO THE ON POSITION: (ABS WARNING LIGHT, BRAKE SYSTEM WARNING LIGHT, DSC INDICATOR LIGHT AND/OR DSC OFF LIGHT) 04–03–15
NO.9 ANY OF THE FOLLOWING LIGHTS REMAIN ON: (ABS WARNING LIGHT, BRAKE SYSTEM WARNING LIGHT, DSC INDICATOR LIGHT AND/ OR DSC OFF LIGHT) 04–03–15
NO.10 THERE IS A MALFUNCTION IN THE SYSTEM EVEN THOUGH ABS WARNING LIGHT, BRAKE SYSTEM WARNING LIGHT, DSC INDICATOR LIGHT AND DSC OFF LIGHT DO NOT ILLUMINATE. 04–03–16
NO.11 ABS OR TCS*1 OPERATES FREQUENTLY/ TCS DOES NOT WORK CORRECTLY *1: DSC SYSTEM FUNCTION CONTAINs TRACTION CONTROL FUNCTION, DSC INDICATOR LIGHT GOES ON AND OUT WHILE DSC OPERATES. 04–03–17
NO.12 DSC*2 OPERATES FREQUENTLY/DSC DOES NOT WORK CORRECTLY *2: DSC INDICATOR LIGHT GOES ON AND OUT WHILE DSC OPERATES 04–03–17

SYSTEM WIRING DIAGRAM

DPE040300000W01

With ABS

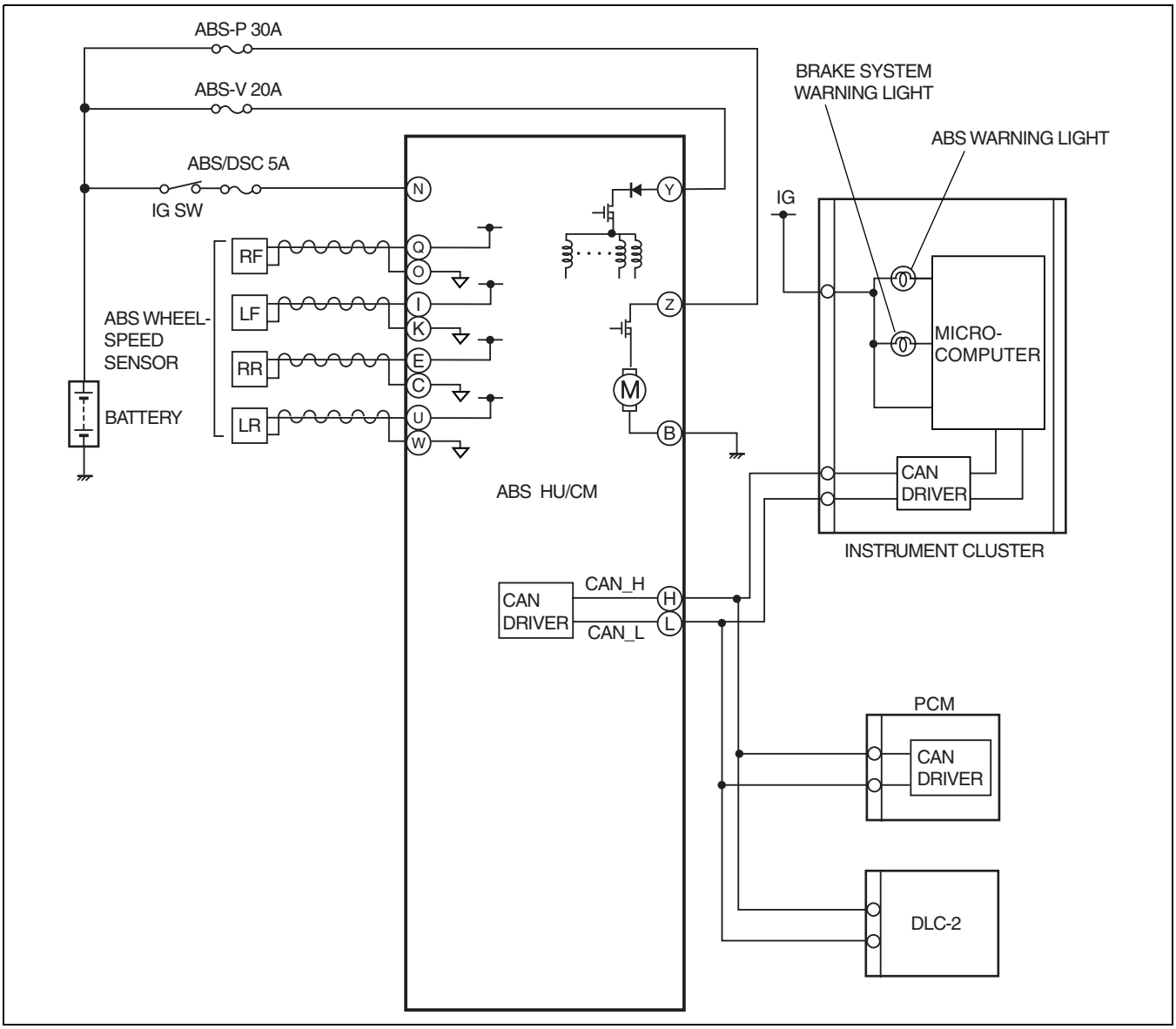

DPE402AW1001

With DSC

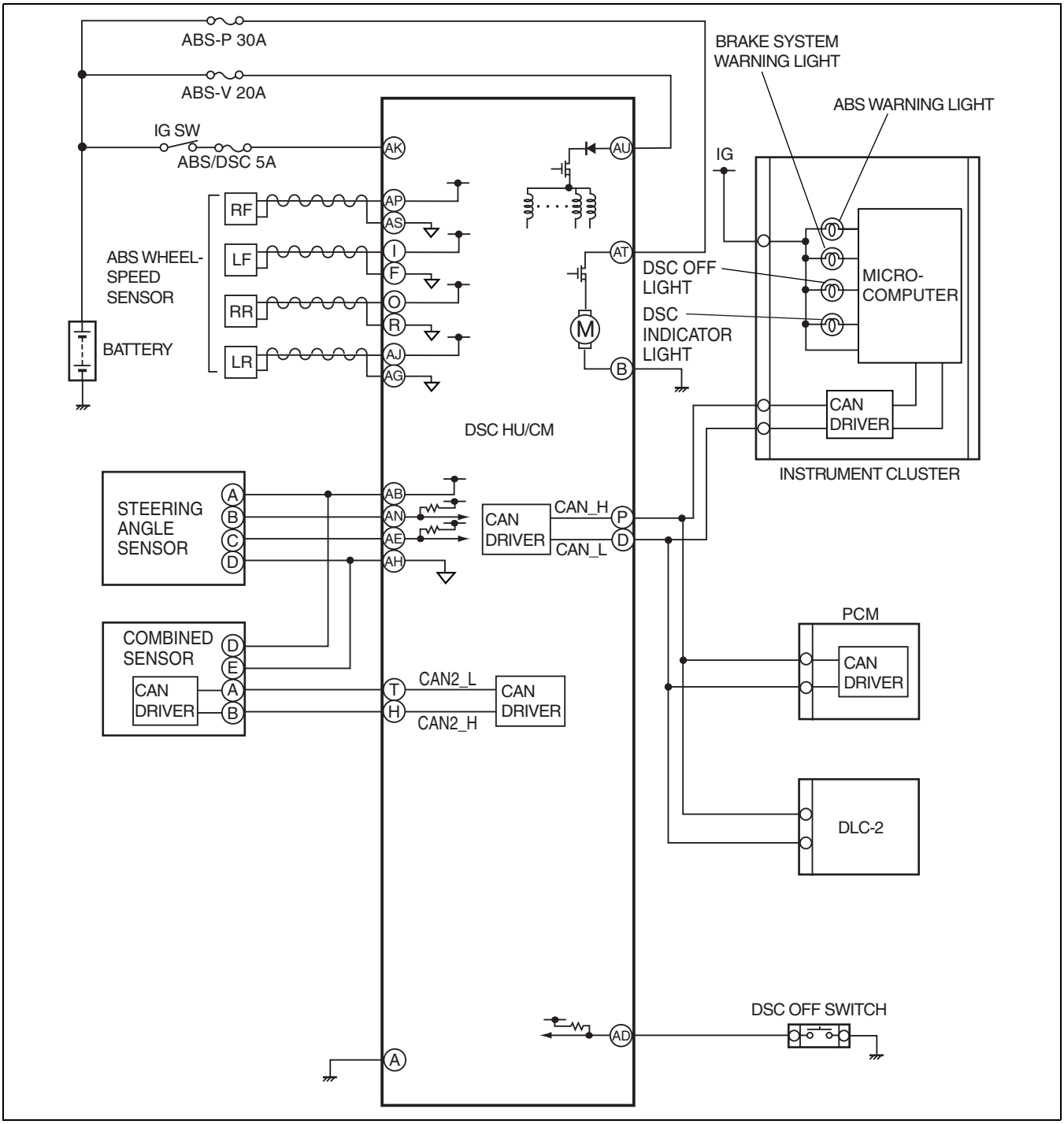

DPE402BW1001

FOREWORD

DPE040300000W02

- Before performing the steps in Symptom Troubleshooting, perform the On-board Diagnostic inspection. To inspect the DTC, follow the DTC Inspection steps. (See 04–02A–3 DTC Table.) (See 04–02B–3 DTC Table.)

PRECAUTION

DPE040300000W03

Vehicles with ABS

1. Any one or a combination of the ABS warning and BRAKE system warning lights illuminates even when the system is normal.

Warning lights that may illuminate and/or flash	Cases in which the light may illuminate	Conditions in which the light will go out	ABS, EBD control
Either or both of the following lights illuminate: • ABS warning light • BRAKE system warning light(*1)	When the front wheels are jacked up, stuck, or placed on a chassis roller, and only the front wheel ABS wheel speed sensors are spun.	After turning ignition switch off, vehicle is driven at speed **greater than 10 km/h {6.2 mph}** and normal operation is confirmed.	• ABS: Cuts control. • EBD: 1. Cuts control, in cases where the light may illuminate, only when ABS CM detects that a wheel speed sensor determines that more than two wheels are malfunctioning. 2. Operates control, if wheel speed sensor determines that more than three wheels are functioning correctly.
	Parking brake is not fully released while driving.		
	Brake drag.		
	Sudden acceleration/ deceleration.		
	Left/right or front/rear tires are different. (Size, radius, tire pressure, or wear is other than that listed on tire label.)		
Both of the following lights illuminate: • ABS warning light • BRAKE system warning light	Battery voltage at ABS HU/CM ignition terminal AK drops **below approx. 8 V.**(*2)	Battery voltage rises **above approx. 8 V.**	ABS: Cuts control. EBD: Cuts control.

*1 : In cases where the light may illuminate, only when ABS HU/CM detects that a wheel-speed sensor determines that more than two wheels are malfunctioning.
*2 : If battery voltage drops **below 8 V** while vehicle speed is **greater than 20 km/h {12.4 mph}** , ABS HU/CM records DTC B1318.

2. Precautions during servicing of ABS
   The ABS is composed of electrical and mechanical parts. It is necessary to categorize malfunctions as being either electrical or hydraulic when performing troubleshooting.
   (1) Malfunctions in electrical system
   - The ABS hydraulic unit and control module (ABS HU/CM) has an on-board diagnostic function. With this function, the ABS warning light and/or BRAKE system warning light will illuminate when there is a problem in the electrical system. Also, past and present malfunctions are recorded in the ABS HU/CM. This function can find malfunctions that do not occur during periodic inspections. Connect the WDS or equivalent to the DLC-2. The stored malfunctions will be displayed in the order of occurrence. To find out the causes of ABS malfunctions, use these on-board diagnostic results.
   - If a malfunction occurred in the past but is now normal, the cause is likely a temporary poor connection of the wiring harness. The ABS HU/CM usually operates normally. Be careful when searching for the cause of malfunction.
   - After repair, it is necessary to clear the DTC from the ABS HU/CM memory. Also, if the ABS related parts have been replaced, verify that the no DTC has been displayed after repairs.
   - After repairing the ABS wheel-speed sensor or ABS sensor rotor, or after replacing the ABS CM (ABS motor or ABS motor relay or solenoid valve), the ABS warning light may not go out (*) even when the ignition switch is turned to the ON position. In this case, drive the vehicle at a speed of **10 km/h {6.2 mph} or more**, make sure that ABS warning light goes out, and then clear the DTC.
     * The BRAKE system warning light also illuminates when any two wheels malfunction, or battery voltage drops **below 8 V**.
   - When repairing, if the ABS related connectors are disconnected and the ignition switch is turned to the ON position, the ABS CM will mistakenly detect a fault and record it as a malfunction.
   - To protect the ABS HU/CM, make sure the ignition switch is turned off before connecting or disconnecting the ABS CM connector.

   (2) Malfunctions in hydraulic system
   - Symptoms in a hydraulic system malfunction are similar to those in a conventional brake malfunction. However, it is necessary to determine if the malfunction is in an ABS component or the conventional brake system.
   - The ABS hydraulic unit contains delicate mechanical parts. If foreign material enters into the component, the ABS may fail to operate. Also, it will likely become extremely difficult to find the location of the malfunction in the event that the brakes operate but the ABS does not. Make sure foreign material does not enter when servicing the ABS (e.g. brake fluid replacement, pipe removal).

Vehicles with DSC

1. The ABS warning light and/or BRAKE system warning light and/or DSC indicator light illuminate even when the system is normal.

Warning lights that may illuminate and/or flash	Cases in which the light may illuminate	Conditions in which the light will go out	ABS, EBD, TCS and DSC control
• ABS warning light • BRAKE system warning light • DSC indicator light	When the front wheels are jacked up, struck, or placed on a chassis roller, and only the front wheel ABS wheel speed sensors are spun for **60 s or more.**	After turning the ignition switch off, vehicle is driven at a speed **greater than 10 km/h {6.2 mph}** and normal operation is confirmed.	ABS: Cuts control. EBD: Cuts control. TCS: Cuts control. DSC: Cuts control.
	Parking brake is not fully released while driving.		
	Brake drag.		
	Sudden acceleration/deceleration.		
	Left/right or front/rear tires are different. (Size, radius, tire pressure, or wear is other than that listed on tire label.)		
	Battery voltage at DSC HU/CM ignition terminal drops **below approx. 8 V.**	Battery voltage rises **above approx. 8 V.**	ABS: Cuts control. EBD: Cuts control. TCS: Cuts control. DSC: Cuts control.

2. Precautions during servicing of DSC. The DSC is composed of electrical and mechanical parts. It is necessary to categorize malfunctions as being either electrical or hydraulic when performing troubleshooting.
   (1) Malfunction in electrical system
   - The control module has an on-board diagnostic function. With this function, the ABS warning light and/or BRAKE system warning light and/or DSC indicator light will illuminate when there is a problem in the electrical system.
     Also, past and present malfunctions are recorded in the control module. This function can find malfunctions that do not occur during periodic inspections. Connect the WDS or equivalent to the DLC-2, then turn the ignition switch to the ON position. As a result, the stored malfunctions will be displayed on the WDS or equivalent in numeric order by connecting DLC-2. To find out the causes of DSC malfunctions, use these on-board diagnostic results.
   - If a malfunction occurred in the past but is now normal, the cause is likely a temporary poor connection of the wiring harness.
     The control module usually operates normally. Be careful when searching for the cause of malfunction.
   - After repair, it is necessary to clear the DTC from the control module memory.
     Also, if the DSC related parts have been replaced, verify that the no DTC has been displayed after repairs.
   - After repairing the ABS wheel-speed sensor or ABS sensor rotor, or after replacing the control module, the ABS warning light may not go out even when the ignition switch is turned to the ON position. In this case, drive the vehicle at a speed of **10 km/h {6.2 mph} or more**, make sure the ABS warning light goes out, and then clear the DTC.
   - When repairing, if the DSC related connectors are disconnected and the ignition switch is turned to the ON position, the control module will mistakenly detect a fault and record it as a malfunction.

   Caution
   - **In DSC vehicles, when the DSC HU/CM, combined sensor is replaced, perform the initialization procedure for each sensor. (See –10 COMBINED SENSOR INITIALIZATION PROCEDURE.) (See –11 BRAKE FLUID PRESSURE SENSOR INITIALIZATION PROCEDURE.)**

   - To protect the control module, make sure the ignition switch is turned off before connecting or disconnecting the control module connector.

   (2) Malfunctions in hydraulic system
   - Symptoms in a hydraulic system malfunction are similar to those in a conventional brake malfunction. However, it is necessary to determine if the malfunction is in a DSC component or the conventional brake system.
   - The hydraulic unit contains delicate mechanical parts. If foreign material enters the component, the DSC may fail to operate. Also, it will likely become extremely difficult to find the location of the malfunction in the event that the brakes operate but the DSC does not. Make sure foreign materials does not enter when servicing the DSC (e.g. brake fluid replacement, pipe removal).

Intermittent Concern Troubleshooting
Vibration method
- If malfunction occurs or becomes worse while driving on a rough road or when engine is vibrating, perform the

steps below.

Note
- There are several reasons why vehicle or engine vibration could cause an electrical malfunction. Some of the things to inspect are:
  — Connectors not fully seated.
  — Wiring harness not having full play.
  — Wires laying across brackets or moving parts.
  — Wires routed too close to hot parts.
- An improperly routed, improperly clamped, or loose wiring harness can cause wiring to become pinched between parts.
- The connector joints, points of vibration, and places where wiring harness pass through the firewall, body panels, etc. are the major areas to be inspected.

Inspection method for switch connectors or wiring harnesses
1. Connect the WDS or equivalent to the DLC-2.
2. Turn the ignition switch to the ON position (Engine OFF).

Note
- If engine starts and runs, perform the following steps at idle.

3. Access PIDs for the switch you are inspecting.
4. Turn switch on manually.
5. Slightly shake each connector or wiring harness vertically and horizontally while monitoring the PID.
   - If the PID value is unstable, inspect poor connection.

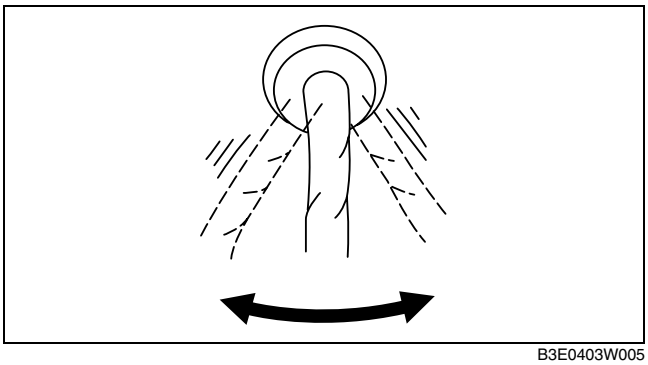

B3E0403W005

Inspection method for sensor connectors or wiring harnesses
1. Connect the WDS or equivalent to the DLC-2.
2. Turn the ignition switch to the ON position (Engine OFF).

Note
- If engine starts and runs, perform the following steps at idle.

3. Access PIDs for the switch you are inspecting.
4. Slightly shake each connector or wiring harness vertically and horizontally while monitoring the PID.
   - If the PID value is unstable, inspect poor connection.

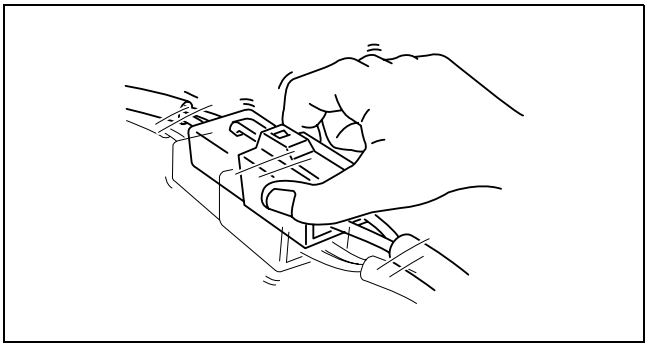

B3E0403W006

Inspection method for sensors
1. Connect the WDS or equivalent to the DLC-2.
2. Turn the ignition switch to the ON position (Engine OFF).

Note
- If engine starts and runs, perform the following steps at idle.

3. Access PIDs for the switch you are inspecting.
4. Vibrate the sensor slightly with your finger.
   - If the PID value is unstable or malfunction occurs, inspect the sensor for poor connection and/or poor mounting.

Malfunction data monitor method

1. Perform malfunction reappearance test according to malfunction reappearance mode and malfunction data monitor. The malfunction cause is found in the malfunction data.

Connector terminal inspection method

1. Inspect the connection condition of each female terminal.
2. Insert the male terminal to the female terminal and Inspect the female terminal for looseness.

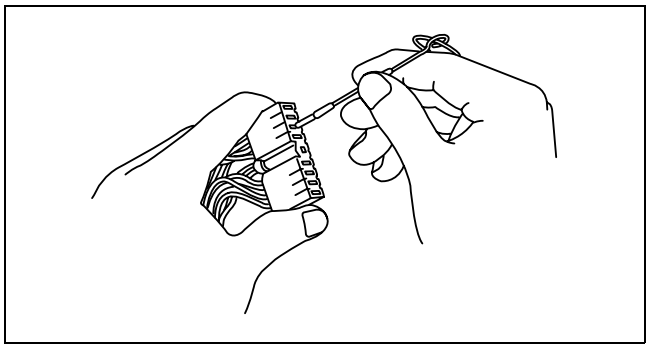

B3E0403W007

SYMPTOM TROUBLESHOOTING

DPE040300000W04

- Verify the symptoms, and perform troubleshooting according to the appropriate number.

Vehicles with ABS

No.	Symptom
1	Neither ABS warning light nor BRAKE system warning light illuminate when the ignition switch is turned to the ON position.
2	ABS warning light does not illuminate when the ignition switch is turned to the ON position.
3	BRAKE system warning light does not illuminate when the ignition switch is turned to the ON position.
4	Both ABS warning light and BRAKE system warning light stay on **4 s or more** when the ignition switch is turned to the ON position.
5	ABS warning light stays on **4 s or more** when the ignition switch is turned to the ON position.
6	BRAKE system warning light stays on **4 s or more** when the ignition switch is turned to the ON position. (Parking brake is released.)
7	There is a malfunction in the system even through ABS warning light, BRAKE system warning light, do not illuminate.

Vehicles with DSC

No.	Symptom
8	Any of the following lights do not illuminate when the ignition switch is turned to the ON position. • ABS warning light • BRAKE system warning light • DSC indicator light • DSC OFF light
9	Any of the following lights remain on: • ABS warning light. • BRAKE system warning light • DSC indicator light • DSC OFF light
10	There is a malfunction in the system even though ABS warning light, BRAKE system warning light, DSC indicator light and DSC OFF light do not illuminate.
11	ABS or TCS[*1] operates frequently.
	TCS does not work correctly.
12	DSC[*2] operates frequently.
	DSC does not work correctly.

[*1] : DSC system contains traction control function; DSC indicator light illuminates and goes out while DSC is operating.

[*2] : DSC indicator light illuminates and goes out while DSC is operating.

Vehicles with ABS

x: Applicable

Troubleshooting item \ Possible factor		ABS HU/CM	Instrument cluster	CAN communication	Battery	Brake fluid	Parking brake switch	Charging system	ABS HU/CM power supply (terminal N)	ABS HU/CM GND (terminal B)	Instrument cluster power supply (terminal 1G)	Instrument cluster GND	Conventional brakes	Brake pipe routing
1	Neither ABS warning light nor BRAKE system warning light illuminate when the ignition switch is turned to the ON position.	X	X	X							X	X		
2	ABS warning light does not illuminate when the ignition switch is turned to the ON position.		X											
3	BRAKE system warning light does not illuminate when the ignition switch is turned to the ON position.		X											
4	Both ABS warning light and BRAKE system warning light stay on 4 s or more when the ignition switch is turned to the ON position.	X	X	X	X			X	X	X				
5	ABS warning light stays on 4 s or more when the ignition switch is turned to the ON position.	X	X	X										
6	BRAKE system warning light stays on 4 s or more when the ignition switch is turned to the ON position. (Parking brake is released.)	X	X			X	X							
7	There is a malfunction in the system even though ABS warning light, BRAKE system warning light do not illuminate.	X											X	X

C3U0403W001

Vehicles with DSC

x: Applicable

	Possible factor / Troubleshooting item	DSC HU/CM	Instrument cluster	CAN communication	Each sensor installation	Battery	Charging system	Brake fluid	Parking brake	Tire	Tire air pressure	Control module power supply system	Control module ground system	Instrument cluster power supply system	Instrument cluster ground system	Conventional brake
8	Any of the following lights do not illuminate when the ignition switch is turned to the on position: (ABS warning light, BRAKE system warning light, DSC indicator light and/or DSC OFF light).	X	X	X										X	X	
9	Any of the following lights remain on: (ABS warning light, BRAKE system warning light, DSC indicator light and/or DSC OFF light).	X	X	X	X	X	X	X	X			X	X			
10	There is a malfunction in the system even though ABS warning light, BRAKE system warning light, DSC indicator light, and DSC OFF light do not illuminate.															X
11	ABS or TCS (*1) operates frequently. /TCS does not work correctly. (*1): DSC system function contains traction control function, DSC indicator light goes on and out while DSC operates.	X			X					X	X					
12	DSC (*2) operates frequently. /DSC does not work correctly. (*2): DSC indicator light goes on and out while DSC operates.	X			X											

B3E0403W002

NO.1 NEITHER ABS WARNING LIGHT NOR BRAKE SYSTEM WARNING LIGHT ILLUMINATE WHEN THE IGNITION SWITCH IS TURNED TO THE ON POSITION

DPE040300000W05

1	**Neither ABS warning light nor BRAKE system warning light illuminate when the ignition switch is turned to the ON position**.
[TROUBLESHOOTING HINTS] • **Instrument cluster or ABS HU/CM malfunction** • **Improper configuration (instrument cluster)**	

STEP	INSPECTION		ACTION
1	**INSPECT FOR DTCs IN ABS HU/CM** • Have DTCs been stored in memory?	Yes	Perform the applicable DTC inspection. (See 04–02A–3 DTC Table.)
		No	Inspect the instrument cluster. If the instrument cluster is normal, inspect CAN communication. If instrument cluster has a malfunction, go to the next step.

STEP	INSPECTION		ACTION
2	**VERIFY WHETHER MALFUNCTION IS IN WARNING LIGHTS AND INDICATOR LIGHT'S COMMON POWER SUPPLY, OR IN OTHER WARNING LIGHTS AND INDICATOR LIGHTS** • Do other warning and indicator lights illuminate when the ignition switch is turned to the ON position?	Yes	Replace the instrument cluster. (Open circuit in instrument cluster)
		No	Go to the next step.
3	**INSPECT INSTRUMENT CLUSTER POWER SUPPLY FUSE** • Is the instrument cluster ignition power supply fuse normal?	Yes	Go to the next step.
		No	Inspect for a short to ground on circuit of blown fuse. Repair or replace if necessary. Install appropriate amperage fuse.
*4	**VERIFY WHETHER MALFUNCTION IS IN WIRING HARNESS (BETWEEN INSTRUMENT CLUSTER POWER SUPPLY AND INSTRUMENT CLUSTER FOR CONTINUITY) OR INSTRUMENT CLUSTER** • Turn the ignition switch to the ON position. • Measure voltage at instrument cluster connector terminal 1G. • Is the voltage **approx. 12 V?**	Yes	Replace the instrument cluster (open circuit in instrument cluster).
		No	Inspect for open circuit in wiring harness between the instrument cluster and ground. Repair or replace if necessary. Replace the ABS HU/CM. (See 04–13–2 ABS HU/CM REMOVAL/INSTALLATION.)

INSTRUMENT CLUSTER WIRING HARNESS-SIDE CONNECTOR

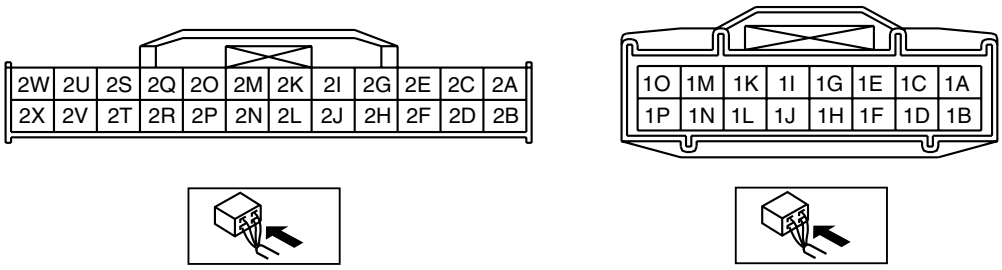

- When performing an asterisked (*) troubleshooting inspection, slightly shake the wiring harness and connectors while performing the inspection to discover whether poor contact points are the cause of any intermittent malfunction. If there is a problem, verify that the connectors, terminals and wiring harness are connected correctly and undamaged.

NO.2 ABS WARNING LIGHT DOES NOT ILLUMINATE WHEN THE IGNITION SWITCH IS TURNED TO THE ON POSITION

DPE040300000W06

2	**ABS warning light does not illuminate when the ignition switch is turned to the ON position.**
[TROUBLESHOOTING HINTS] • **Instrument cluster malfunction**	

NO.3 BRAKE SYSTEM WARNING LIGHT DOES NOT ILLUMINATE WHEN THE IGNITION SWITCH IS TURNED TO THE ON POSITION

DPE040300000W07

3	**BRAKE system warning light does not illuminate when the ignition switch is turned to the ON position.**
[TROUBLESHOOTING HINTS] • **Instrument cluster malfunction**	

NO.4 BOTH ABS WARNING LIGHT AND BRAKE SYSTEM WARNING LIGHT STAY ON 4 S OR MORE WHEN THE IGNITION SWITCH IS TURNED TO THE ON POSITION

DPE040300000W08

4	**Both ABS warning light and BRAKE system warning light stay on 4 s or more when the ignition switch is turned to the ON position.**
[TROUBLESHOOTING HINTS] • **ABS HU/CM detects ABS proportioning system malfunction.** • **ABS HU/CM detects low voltage in power supply (ABS CM ignition terminal N voltage is below approx. 8 V).** • **ABS HU/CM does not operate.** • **Malfunction of communication network**	

Diagnostic procedure

STEP	INSPECTION		ACTION
1	**INSPECT ABS HU/CM POWER SUPPLY FUSE** • Is the ABS HU/CM ignition power supply fuse normal?	Yes	Go to the next step. Inspect for a short to ground on blown fuse's circuit.
		No	Repair or replace if necessary. Install appropriate amperage fuse.
2	**INSPECT WIRING HARNESS BETWEEN ABS HU/CM AND DLC-2 FOR CONTINUITY AND SHORT CIRCUIT** • Perform DTC inspection. • Is any error message displayed regarding communication between the ABS HU/CM and WDS or equivalent?	Yes	If the communication error message is displayed even after inspecting according to the procedure displayed on the WDS or equivalent, go to step 6.
		No	Go to the next step.
3	**INSPECT FOR DTCs IN ABS HU/CM** • Have DTCs been stored in memory?	Yes	Perform the applicable DTC inspection. (See 04–02A–3 DTC Table.)
		No	Inspect the instrument cluster. If the instrument cluster is normal, go to the next step. If the instrument cluster has some malfunction, repair the instrument cluster, then go to the next step.
4	**INSPECT BATTERY** • Is the battery voltage normal?	Yes	Go to the next step.
		No	Inspect the battery and charging system. (See 01–17B–2 BATTERY INSPECTION [MZR-CD (RF Turbo)].) (See 01–17A–5 BATTERY INSPECTION [L8, LF].) (See 01–17B–5 GENERATOR INSPECTION [MZR-CD (RF Turbo)].) (See 01–17A–7 GENERATOR INSPECTION [L8, LF].)
5	**INSPECT CHARGING SYSTEM** • Is the battery voltage normal with electrical load (such as A/C, headlight) on and engine idling?	Yes	Go to the next step.
		No	Inspect the charging system (such as drive belt tension and generator). (See 01–17B–5 GENERATOR INSPECTION [MZR-CD (RF Turbo)].) (See 01–17A–7 GENERATOR INSPECTION [L8, LF].)
6	**INSPECT ABS HU/CM IGNITION POWER SUPPLY SYSTEM (TERMINAL N)** • Disconnect the ABS HU/CM connector. • Turn the ignition switch to the ON position. • Inspect the voltage of connector terminal N. **Specification: approx. 8 V** • Is the voltage within the specification?	Yes	Replace the ABS HU/CM (open or short in ground circuit in the ABS HU/CM). (See 04–13–2 ABS HU/CM REMOVAL/INSTALLATION.)
		No	Repair the wiring harness between the ABS HU/CM and ground.
7	**INSPECT WIRING HARNESS BETWEEN ABS HU/CM GROUND FOR CONTINUITY** • Turn the ignition switch to the LOCK position. • Is there continuity between connector terminal B and ground?	Yes	If a malfunction error message is displayed on the WDS or equivalent in Step 1 inspection, go to the next step. If a malfunction error message is not displayed on the WDS or equivalent in Step 1 inspection, troubleshooting is completed.
		No	Repair the wiring harness between the ABS HU/CM and ground.
8	**INSPECT WIRING HARNESS BETWEEN ABS HU/CM AND DLC-2 FOR CONTINUITY** • Is there continuity between connector terminal H, L and DLC-2?	Yes	Go to the next step.
		No	Repair the wiring harness between the ABS HU/CM and DLC-2.
9	**INSPECT WIRING HARNESS BETWEEN ABS HU/CM AND DLC-2 FOR SHORT TO POWER SUPPLY** • Is the voltage **approx. 12 V** at connector terminal H, L?	Yes	Repair the wiring harness between the ABS HU/CM and DLC-2.
		No	Go to the next step.
10	**INSPECT WIRING HARNESS BETWEEN ABS HU/CM AND DLC-2 FOR SHORT TO GROUND** • Is there continuity between connector terminal H, L and DLC-2?	Yes	Repair the wiring harness between the ABS HU/CM and DLC-2.
		No	Replace the ABS HU/CM (communication circuit malfunction in ABS HU/CM). (See 04–13–2 ABS HU/CM REMOVAL/INSTALLATION.)

STEP	INSPECTION	ACTION

ABS HU/CM WIRING HARNESS-SIDE CONNECTOR

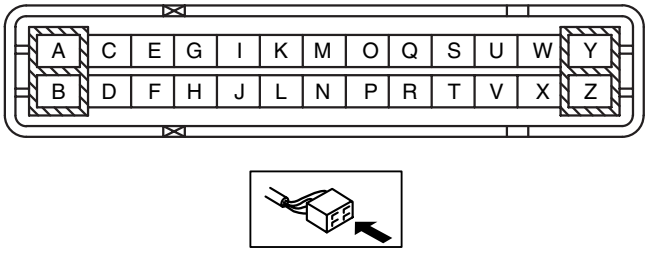

INSTRUMENT CLUSTER WIRING HARNESS-SIDE CONNECTOR

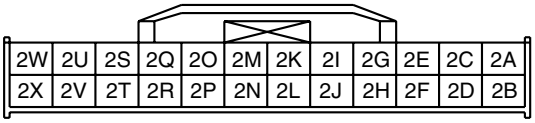

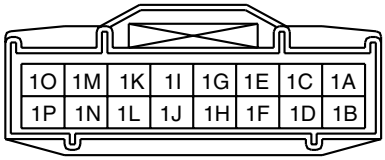

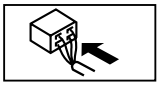

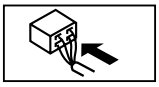

NO.5 ABS WARNING LIGHT STAYS ON 4 S OR MORE WHEN THE IGNITION SWITCH IS TURNED TO THE ON POSITION

DPE040300000W09

5	ABS warning light stays on 4 s or more when the ignition switch is turned to the ON position.

[TROUBLESHOOTING HINTS]
- **ABS CM detects ABS system malfunction.**

Diagnostic procedure

STEP	INSPECTION		ACTION
1	**INSPECT WIRING HARNESS BETWEEN ABS HU/CM AND DLC-2 FOR CONTINUITY AND SHORT CIRCUIT** • Perform DTC inspection. • Is any error message displayed regarding communication between ABS HU/CM and the WDS or equivalent?	Yes	If the communication error message is displayed even after inspecting according to the procedures displayed in the WDS or equivalent, go to Step 4.
		No	Go to the next step.
2	**INSPECT FOR DTCs IN ABS HU/CM** • Have DTCs been stored in memory?	Yes	Perform the applicable DTC inspection. (See 04–02A–3 DTC Table.)
		No	Inspect the instrument cluster If the instrument cluster is normal, go to the next step. If the instrument cluster has a malfunction, repair the instrument cluster, go to the next step.
3	**INSPECT WIRING HARNESS BETWEEN ABS HU/CM AND DLC-2 FOR CONTINUITY** • Disconnect the ABS HU/CM connector. • Is there continuity between connector terminal H, L and DLC-2?	Yes	Go to the next step.
		No	Repair the wiring harness between the ABS HU/CM and DLC-2.
*4	**INSPECT WIRING HARNESS BETWEEN ABS HU/CM AND DLC-2 FOR SHORT TO POWER SUPPLY** • Is the voltage **approx. 12 V** at connector terminal H, L?	Yes	Repair the wiring harness between the ABS HU/CM and DLC-2.
		No	Go to the next step.
5	**INSPECT WIRING HARNESS BETWEEN ABS HU/CM AND DLC-2 FOR SHORT TO GROUND** Is there continuity between connector terminal H, L and ground?	Yes	Repair the wiring harness between the ABS HU/CM and DLC-2.
		No	Replace the ABS HU/CM (communication circuit malfunction in ABS HU/CM). (See 04–13–2 ABS HU/CM REMOVAL/INSTALLATION.)

ABS HU/CM WIRING HARNESS-SIDE CONNECTOR

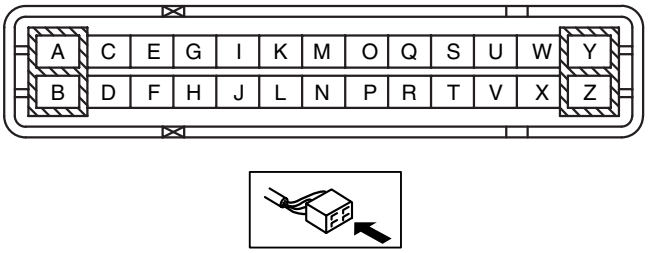

INSTRUMENT CLUSTER WIRING HARNESS-SIDE CONNECTOR

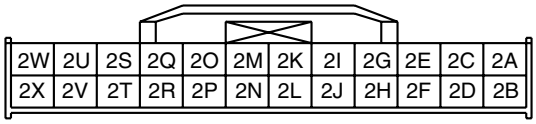

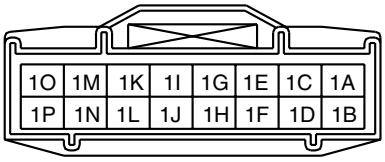

- When performing an asterisked (*) troubleshooting inspection, slightly shake the wiring harness and connectors while performing the inspection to discover whether poor contact points are the cause of any intermittent malfunction. If there is a problem, verify that the connectors, terminals and wiring harness are connected correctly and undamaged.

NO.6 BRAKE SYSTEM WARNING LIGHT STAYS ON 4 S OR MORE WHEN THE IGNITION SWITCH IS

TURNED TO THE ON POSITION (PARKING BRAKE IS RELEASED)

DPE040300000W10

6	**BRAKE system warning light stays on 4 s or more when the ignition switch is turned to the ON position. (Parking brake is released.)**

[TROUBLESHOOTING HINTS]
- **Instrument cluster malfunction**
- **Short to ground in circuit in parking brake switch**
- **Brake fluid level sensor is low**

Diagnostic procedure

1	**INSPECT BRAKE FLUID LEVEL** • Is brake fluid level normal?	Yes	Go to the next step.
		No	Add brake fluid.
2	**INSPECT FOR DTCs IN ABS HU/CM** • Have DTCs been stored in memory?	Yes	Perform the applicable DTC inspection. (See 04–02A–3 DTC Table.)
		No	Go to the next step.
3	**VERIFY WHETHER MALFUNCTION IS IN PARKING BRAKE SWITCH** • Disconnect the parking brake switch connector. • Does BRAKE system warning light go out with the ignition switch is turned to the ON position?	Yes	Replace the parking brake switch. (See 04–12–2 PARKING BRAKE LEVER REMOVAL/ INSTALLATION.)
		No	Perform the following inspection. Repair if necessary. • Short to ground in the wiring harness between the instrument cluster (BRAKE system warning light) and parking brake switch. Inspect the instrument cluster.
*4	**INSPECT WIRING HARNESS BETWEEN ABS HU/CM AND DLC -2 FOR CONTINUITY** • Disconnect the ABS HU/CM connector. • Is there continuity between connector terminal H, L and DLC-2?	Yes	Go to the next step.
		No	Repair the wiring harness between the ABS HU/CM and DLC-2.
*5	**INSPECT WIRING HARNESS BETWEEN ABS/ HU/CM AND DLC-2 FOR SHORT TO POWER SUPPLY** Is the voltage **approx. 12 V** at connector terminal H, L?	Yes	Repair the wiring harness between the ABS HU/CM and DLC-2.
		No	Go to the next step.
*6	**INSPECT WIRING HARNESS BETWEEN ABS HU/CM AND DLC-2 FOR SHORT TO GROUND** Is there continuity between connector terminal H, L and ground?	Yes	Repair the wiring harness between the ABS HU/CM and DLC-2.
		No	Replace ABS HU/CM (communication circuit malfunction in ABS HU/CM). (See 04–13–2 ABS HU/CM REMOVAL/INSTALLATION.)

ABS HU/CM WIRING HARNESS-SIDE CONNECTOR

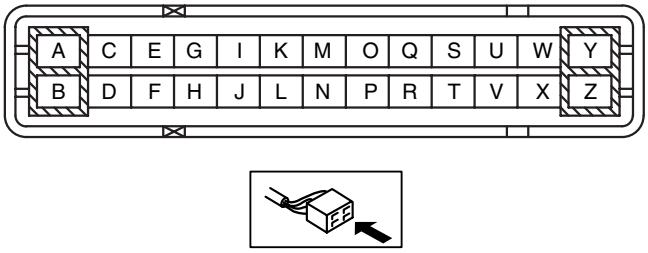

INSTRUMENT CLUSTER WIRING HARNESS-SIDE CONNECTOR

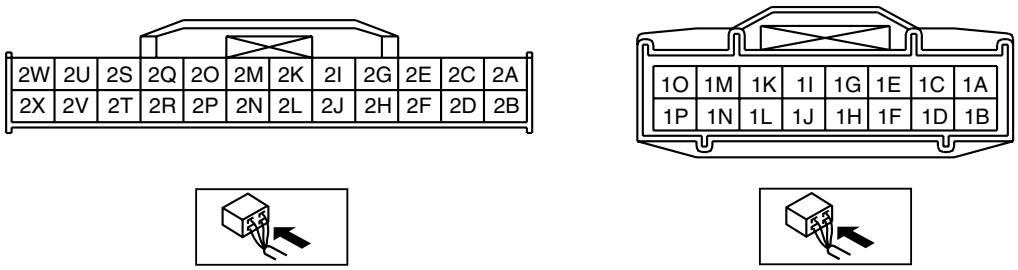

- When performing an asterisked (*) troubleshooting inspection, slightly shake the wiring harness and connectors while performing the inspection to discover whether poor contact points are the cause of any intermittent

malfunction. If there is a problem, verify that the connectors, terminals and wiring harness are connected correctly and undamaged.

NO.7 THERE IS MALFUNCTION IN THE SYSTEM EVEN THOUGH ABS WARNING LIGHT, BRAKE SYSTEM WARNING LIGHT, DO NOT ILLUMINATE

DPE040300000W11

7	**There is a malfunction in system even though ABS warning light, BRAKE system warning light, do not illuminate.**
[TROUBLESHOOTING HINTS] • **There is a difference in size or air pressure between the front and rear tires.**	

Diagnostic procedure

STEP	INSPECTION		ACTION
1	**INSPECT FOR DTCs IN ABS HU/CM** Have DTCs been stored in memory?	Yes	Perform the applicable DTC inspection. (See 04–02A–3 DTC Table.)
		No	Go to the next step.
2	**INSPECT ABS HYDRAULIC UNIT** Perform the ABS hydraulic unit system inspection. Is the system normal?	Yes	Inspect the conventional brake system.
		No	**If the wheels do not rotate:** Replace the ABS HU/CM. (See 04–13–2 ABS HU/CM REMOVAL/INSTALLATION.) **If the wheels rotate but order in which wheels rotate is incorrect:** Inspect the brake pipe passage to the ABS HU/CM.

NO.8 ANY OF THE FOLLOWING LIGHTS DO NOT ILLUMINATE WHEN THE IGNITION SWITCH IS TURNED TO THE ON POSITION: (ABS WARNING LIGHT, BRAKE SYSTEM WARNING LIGHT, DSC INDICATOR LIGHT AND/OR DSC OFF LIGHT)

DPE040300000W12

8	**Any of the following lights do not illuminate when the ignition switch is turned to the ON position: (ABS warning light, BRAKE system warning light, DSC indicator light and/or DSC OFF light).**
[TROUBLESHOOTING HINTS] • **Inspect each light in the instrument cluster for malfunction.** • **Poor connection at DSC HU/CM connector**	

Diagnostic procedure

STEP	INSPECTION		ACTION
1	**INSPECT FOR DTCs IN DSC HU/CM** • Have DTCs been stored in memory?	Yes	Perform the applicable DTC inspection. (See 04–02B–3 DTC Table.)
		No	Go to the next step.
2	**INSPECT IF MALFUNCTION IS IN INSTRUMENT CLUSTER SYSTEM OR OTHER SYSTEM** • Do other warning and indicator lights illuminate when the ignition switch is turned to the ON position?	Yes	Go to the next step.
		No	Inspect or repair the instrument cluster (power supply system, ground system).
3	**VERIFY THAT DSC HU/CM CONNECTOR IS CONNECTED** • Is the DSC HU/CM connector securely connected?	Yes	Go to the next step.
		No	Connect the DSC HU/CM connector securely, then go to the next step.
4	**VERIFY THAT DSC HU/CM CONNECTOR TERMINAL OR RELATED CONNECTOR TERMINALS ARE CONNECTED** • Are the DSC HU/CM connector terminal, instrument cluster connector terminal, or related connector terminals securely connected?	Yes	Replace the DSC HU/CM. (See –4 DSC HU/CM REMOVAL/INSTALLATION.)
		No	Connect the DSC HU/CM connector terminal or related connector terminal securely.

NO.9 ANY OF THE FOLLOWING LIGHTS REMAIN ON: (ABS WARNING LIGHT, BRAKE SYSTEM WARNING LIGHT, DSC INDICATOR LIGHT AND/OR DSC OFF LIGHT)

DPE040300000W13

9	**Any of the following lights remain on: (ABS warning light, BRAKE system warning light, DSC indicator light and/or DSC OFF light)**

[TROUBLESHOOTING HINTS]
- **Brake fluid amount is low.**
- **Parking brake is not released.**
- **No connection at DSC HU/CM connector**
  (When DSC HU/CM connector goes out, ABS warning light and BRAKE system warning light illuminate.)
- **DSC HU/CM detected malfunction (input and output device malfunction).**
- **DSC HU/CM detects low voltage in power supply circuit.**
- **DSC HU/CM ground malfunction**
  (When DSC HU/CM ground is not securely connected, ABS warning light and BRAKE system warning light illuminate but no DTC is displayed.)
- **DSC HU/CM does not operate (DSC HU/CM malfunction).**

Diagnostic procedure

STEP	INSPECTION		ACTION
1	**INSPECT BRAKE FLUID AMOUNT AND VERIFY THAT PARKING BRAKE RELEASES** • Is the brake fluid amount normal? • Is the parking brake lever released?	Yes	Go to the next step.
		No	Add brake fluid or release the parking brake lever.
2	**INSPECT FOR DTCs IN DSC HU/CM** • Have DTCs been stored in memory?	Yes	Perform the applicable DTC inspection. (See 04–02B–3 DTC Table.)
		No	Go to the next step.
3	**INSPECT IF MALFUNCTION IS IN CONTROL MODULE CONNECTOR, TERMINAL OR OTHER** • Do ABS warning light and BRAKE system warning light go out **after 4 s** with the ignition switch turned to the ON position?	Yes	Temporary poor connection in control module connector. Inspect the DSC HU/CM connector, then go to Step 6. Inspect the DSC HU/CM connector terminal, then go to Step 7.
		No	Go to the next step.
4	**INSPECT BATTERY** • Is the battery voltage normal?	Yes	Go to the next step.
		No	Inspect the battery and charging system. (See 01–17B–2 BATTERY INSPECTION [MZR-CD (RF Turbo)].) (See 01–17A–5 BATTERY INSPECTION [L8, LF].) (See 01–17B–5 GENERATOR INSPECTION [MZR-CD (RF Turbo)].) (See 01–17A–7 GENERATOR INSPECTION [L8, LF].)
5	**INSPECT CHARGING SYSTEM** • Is the battery voltage normal with electrical load (such as A/C, headlight) on and engine idling?	Yes	Go to the next step.
		No	Inspect the charging system (such as drive belt tension, generator). (See 01–17B–5 GENERATOR INSPECTION [MZR-CD (RF Turbo)].) (See 01–17A–7 GENERATOR INSPECTION [L8, LF].)
6	**VERIFY THAT DSC HU/CM CONNECTOR IS CONNECTED** • Is the DSC HU/CM securely connected?	Yes	Go to the next step.
		No	Connect the DSC HU/CM connector securely, then go to the next step.
7	**VERIFY THAT DSC HU/CM CONNECTOR TERMINAL OR RELATED CONNECTOR TERMINALS ARE CONNECTED** • Are DSC HU/CM connector terminal or instrument cluster connector terminal, related connector terminals securely connected?	Yes	Replace the DSC HU/CM. (See –4 DSC HU/CM REMOVAL/INSTALLATION.)
		No	Connect the DSC HU/CM connector terminal or related connector terminals securely.

NO.10 THERE IS A MALFUNCTION IN THE SYSTEM EVEN THOUGH ABS WARNING LIGHT, BRAKE SYSTEM WARNING LIGHT, DSC INDICATOR LIGHT AND DSC OFF LIGHT DO NOT ILLUMINATE

DPE040300000W14

10	**There is a malfunction in the system even though ABS warning light, BRAKE system warning light, DSC indicator light and DSC OFF light do not illuminate.**
[TROUBLESHOOTING HINTS] • **There is a mechanical malfunction in the system.**	

Diagnostic procedure

STEP	INSPECTION		ACTION
1	**INSPECT FOR DTCs IN DSC HU/CM** • Have DTCs been stored in memory?	Yes	Perform the applicable DTC inspection. (See 04–02B–3 DTC Table.)
		No	Go to the next step.
2	**INSPECT DSC SYSTEM** • Perform the DSC system inspection. • Is the system normal?	Yes	Inspect the conventional brake system.
		No	Repair or replace the malfunctioning part.

NO.11 ABS OR TCS*1 OPERATES FREQUENTLY/TCS DOES NOT WORK CORRECTLY *1: DSC SYSTEM FUNCTION CONTAINS TRACTION CONTROL FUNCTION, DSC INDICATOR LIGHT GOES ON AND OUT WHILE DSC OPERATES

DPE040300000W15

11	**ABS or TCS (*1) operates frequently./TCS does not work correctly. (*1): DSC system function contains traction control function, DSC indicator light goes on and out while DSC operates.**

[TROUBLESHOOTING HINTS]
- **There is a difference in size or air pressure between the front and rear tires.**
- **Incorrect ABS wheel-speed signal is input to DSC HU/CM**
- **There is a malfunction in the engine control system (TCS malfunction).**

Diagnostic procedure

STEP	INSPECTION		ACTION
1	**INSPECT FOR DTCs IN DSC HU/CM** • Have DTCs been stored in memory?	Yes	Perform the applicable DTC inspection. (See 04–02B–3 DTC Table.)
		No	Go to the next step.
2	**INSPECT TIRE SIZE AND AIR PRESSURE** • Inspect the tire size and air pressure. • Are the size and air pressure as specified?	Yes	Go to the next step.
		No	Replace with the specified tires and adjust tire air pressure.
3	**INSPECT ABS WHEEL-SPEED SENSOR OUTPUT VALUE** • Inspect the output value from the ABS wheel-speed sensor. (See 04–13–6 Sensor Output Value Inspection.) (See 04–13–9 Sensor Output Value Inspection.) • Is the output value normal?	Yes	Found malfunctioning part according to “INTERMITTENT CONCERN TROUBLESHOOTING”.
		No	• ABS wheel-speed sensor installation inspection: Inspect the ABS wheel-speed sensor for looseness and confirm it is securely adhered. • ABS sensor rotor installation inspection: Inspect the ABS sensor rotor for poor installation.

NO.12 DSC*2 OPERATES FREQUENTLY/DSC DOES NOT WORK CORRECTLY *2: DSC INDICATOR LIGHT GOES ON AND OUT WHILE DSC OPERATES

DPE040300000W16

12	**DSC (*2) operates frequently. /DSC does not work correctly. (*2): DSC indicator light goes on and off while DSC operates.**

[TROUBLESHOOTING HINTS]
- **DSC HU/CM detected a malfunction (input and output device malfunction).**
- **Poor installation of combined sensor and/or steering angle sensor.**
  (If any of the above sensors are poorly installed, DSC may operate intermittently.)
- **Initialization was not performed for combined sensor, brake fluid pressure sensor when replacing DSC HU/CM, combined sensor.**
  (If initialization is not performed correctly, DSC may not work correctly.)

Diagnostic procedure

STEP	INSPECTION		ACTION
1	**INSPECT FOR DTCs IN DSC HU/CM** • Have DTCs been stored in memory?	Yes	Perform the applicable DTC inspection. (See 04–02B–3 DTC Table.)
		No	Go to the next step.
2	**VERIFY THAT EACH SENSOR IS INSTALLED** • Are the combined sensor and steering angle sensor securely installed?	Yes	Go to the next step.
		No	Install the malfunctioning sensor securely.
*3	**VERIFY THAT EACH SENSOR IS INITIALIZED** • Did each sensor initialize after replacement of DSC HU/CM, combined sensor?	Yes	Find malfunctioning part according to “INTERMITTENT CONCERN TROUBLESHOOTING.”
		No	Perform initialization procedure. (See –10 COMBINED SENSOR INITIALIZATION PROCEDURE.) (See –11 BRAKE FLUID PRESSURE SENSOR INITIALIZATION PROCEDURE.)

04–10 GENERAL PROCEDURES

GENERAL PROCEDURES (BRAKE) . . . 04–10–1

GENERAL PROCEDURES (BRAKE)

DPE041000000W01

Wheel and Tire Installation

1. When installing the wheels and tires, tighten the wheel nuts in a criss-cross pattern to the following tightening torque.

   Tightening torque
   88.2—117.6 N·m {9.00—11.99 Kgf·m, 65.06—86.73 ft·lbf}

Brake Lines Disconnection

1. If any brake line has been disconnected during the procedures, add brake fluid, bleed the brakes, and inspect for leakage after the procedure has been completed.

   Caution
   - **Brake fluid will damage painted surfaces. Be careful not to spill any on painted surfaces. If it is spilled, wipe it off immediately.**

Brake Pipe Flare Nut Tightening

1. Tighten the brake pipe flare nut using the **SST** (49 0259 770B) or any commercially available flare nut wrench.

Connector Disconnection

1. Disconnect the negative battery cable before performing any work that requires handling of connectors. (See 01–17B–1 BATTERY REMOVAL/INSTALLATION [MZR-CD (RF Turbo)].) (See 01–17A–1 BATTERY REMOVAL/INSTALLATION [L8, LF].)

ABS/DSC Related Parts

1. Make sure that there are no DTCs in the ABS/DSC memory after working on ABS/DSC related parts. If there are any DTCs in the memory, clear them.

DSC Related Parts Sensor Initialization Procedure

Warning
- **If the initialization procedure is not completed, the DSC will not operate properly and it might cause an unexpected accident. Therefore, when replacing or removing the following parts, make sure to perform the initialization procedure to ensure proper DSC operation.**

1. When replacing or removing the following parts, perform the initialization procedure. (See –10 COMBINED SENSOR INITIALIZATION PROCEDURE.) (See –11 BRAKE FLUID PRESSURE SENSOR INITIALIZATION PROCEDURE.)
   — DSC HU/CM
   — Combined sensor

04–11 CONVENTIONAL BRAKE SYSTEM

CONVENTIONAL BRAKE SYSTEM LOCATION INDEX 04–11–2
AIR BLEEDING 04–11–3
VACUUM LINE INSPECTION 04–11–3
VACUUM HOSE REMOVAL/ INSTALLATION 04–11–4
BRAKE PEDAL INSPECTION 04–11–5
BRAKE PEDAL REMOVAL/INSTALLATION [L.H.D.] 04–11–6
BRAKE PEDAL REMOVAL/INSTALLATION [R.H.D.] 04–11–8
BRAKE SWITCH INSPECTION 04–11–9
MASTER CYLINDER REMOVAL/INSTALLATION [L.H.D.] 04–11–9
MASTER CYLINDER REMOVAL/INSTALLATION [R.H.D.] 04–11–11
BRAKE FLUID LEVEL SENSOR INSPECTION 04–11–11
POWER BRAKE UNIT INSPECTION . . . 04–11–12
POWER BRAKE UNIT REMOVAL/INSTALLATION [L.H.D.] 04–11–13
POWER BRAKE UNIT REMOVAL/INSTALLATION [R.H.D.] 04–11–14
VACUUM PUMP INSPECTION [MZR-CD (RF Turbo)] 04–11–15
VACUUM PUMP REMOVAL/INSTALLATION [MZR-CD (RF Turbo)] 04–11–15
FRONT BRAKE (DISC) INSPECTION . . . 04–11–17
FRONT BRAKE (DISC) REMOVAL/ INSTALLATION. 04–11–19
DISC PAD (FRONT) REPLACEMENT . . . 04–11–21
CALIPER (FRONT) DISASSEMBLY/ ASSEMBLY. 04–11–22
REAR BRAKE (DISC) INSPECTION 04–11–24
REAR BRAKE (DISC) REMOVAL/ INSTALLATION. 04–11–26
DISC PAD (REAR) REPLACEMENT 04–11–28
CALIPER (REAR) DISASSEMBLY/ ASSEMBLY. 04–11–29

CONVENTIONAL BRAKE SYSTEM LOCATION INDEX

DPE041100000W01

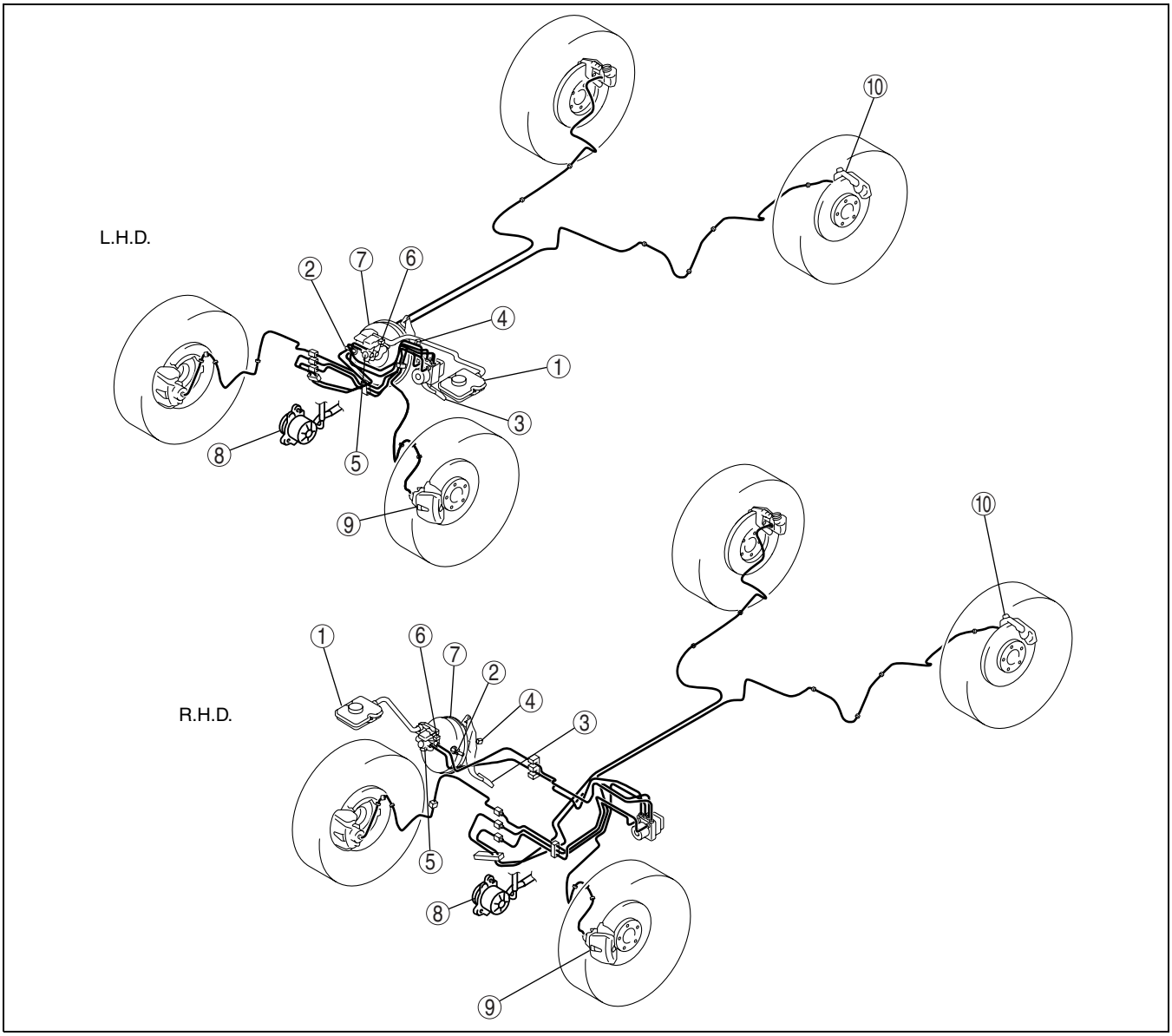

DPE411ZW1001

1	Brake fluid (See 04–11–3 AIR BLEEDING.)
2	Vacuum line (See 04–11–3 VACUUM LINE INSPECTION.) (See 04–11–4 VACUUM HOSE REMOVAL/ INSTALLATION.)
3	Brake pedal (See 04–11–5 BRAKE PEDAL INSPECTION.) (See 04–11–6 BRAKE PEDAL REMOVAL/ INSTALLATION [L.H.D.].) (See 04–11–8 BRAKE PEDAL REMOVAL/ INSTALLATION [R.H.D.].)
4	Brake switch (See 04–11–9 BRAKE SWITCH INSPECTION.)
5	Master cylinder (See 04–11–9 MASTER CYLINDER REMOVAL/ INSTALLATION [L.H.D.].) (See 04–11–11 MASTER CYLINDER REMOVAL/ INSTALLATION [R.H.D.].)
6	Brake fluid level sensor (See 04–11–11 BRAKE FLUID LEVEL SENSOR INSPECTION.)

7	Power brake unit (See 04–11–12 POWER BRAKE UNIT INSPECTION.) (See 04–11–13 POWER BRAKE UNIT REMOVAL/ INSTALLATION [L.H.D.].) (See 04–11–14 POWER BRAKE UNIT REMOVAL/ INSTALLATION [R.H.D.].)
8	Vacuum pump [MZR-CD (RF Turbo)] (See 04–11–15 VACUUM PUMP INSPECTION [MZR-CD (RF Turbo)].) (See 04–11–15 VACUUM PUMP REMOVAL/ INSTALLATION [MZR-CD (RF Turbo)].)
9	Front brake (disc) (See 04–11–17 FRONT BRAKE (DISC) INSPECTION.) (See 04–11–19 FRONT BRAKE (DISC) REMOVAL/ INSTALLATION.) (See 04–11–21 DISC PAD (FRONT) REPLACEMENT.) (See 04–11–22 CALIPER (FRONT) DISASSEMBLY/ASSEMBLY.)

10	Rear brake (disc) (See 04–11–24 REAR BRAKE (DISC) INSPECTION.) (See 04–11–26 REAR BRAKE (DISC) REMOVAL/ INSTALLATION.) (See 04–11–28 DISC PAD (REAR) REPLACEMENT.) (See 04–11–29 CALIPER (REAR) DISASSEMBLY/ ASSEMBLY.)

AIR BLEEDING

DPE041100000W03

Caution
- **Brake fluid will damage painted surfaces. Be careful not to spill any on painted surfaces. If it is spilled, wipe it off immediately.**

Note
- Keep the fluid level in the reserve tank at 3/4 full or more during the air bleeding.
- Begin air bleeding with the brake caliper that is furthest from the master cylinder.

Brake fluid type
European (L.H.D. U.K.) specs.: SAE J1703, FMVSS 116 DOT-3 or DOT-4
General (L.H.D. R.H.D.) specs.: SAE J1703, FMVSS 116 DOT-3

1. Remove the bleeder cap on the brake caliper, and attach a vinyl tube to the bleeder screw.
2. Place the other end of the vinyl tube in a clear container and fill the container with fluid during air bleeding.
3. Working with two people, one should pump the brake pedal several times and depress and hold the pedal down.
4. While the brake pedal is depressed, the other should loosen the bleeder screw using the **SST** or any commercially available flare nut wrench, drain out any fluid containing air bubbles, and tighten the bleeder screw.

   Tightening torque
   Front: 7—9 N·m {72—91 kgf·cm, 70—79 in·lbf}
   Rear: 12—16 N·m {123—163 kgf·cm, 107—141 in·lbf}

5. Repeat Steps 3 and 4 until no air bubbles are seen.
6. Perform air bleeding as described in the above procedures for all brake calipers.
7. After air bleeding, inspect the following:
   - Brake operation
   - Fluid leakage
   - Fluid level

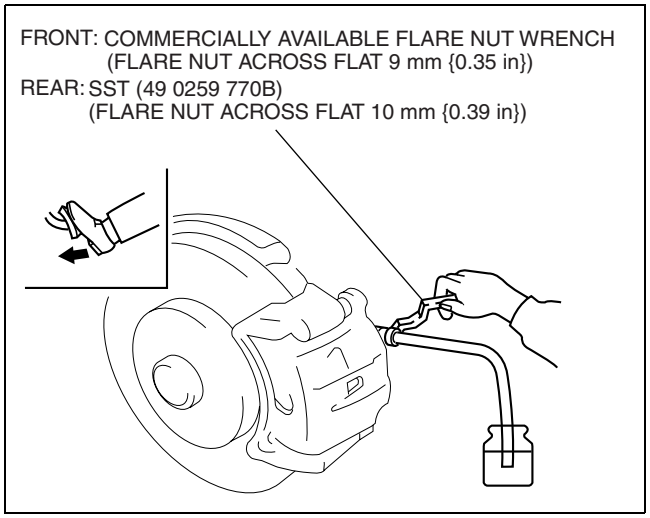

B3E0411W020

VACUUM LINE INSPECTION

DPE041143640W01

1. Remove the vacuum hose. (See 04–11–4 VACUUM HOSE REMOVAL/INSTALLATION.)

2. Verify that air can be blown from the power brake unit side of the vacuum hose towards the engine side, and that air cannot be blown in the opposite direction.
   - If there is any malfunction of the inner check valve, replace it together with the vacuum hose as a single unit.

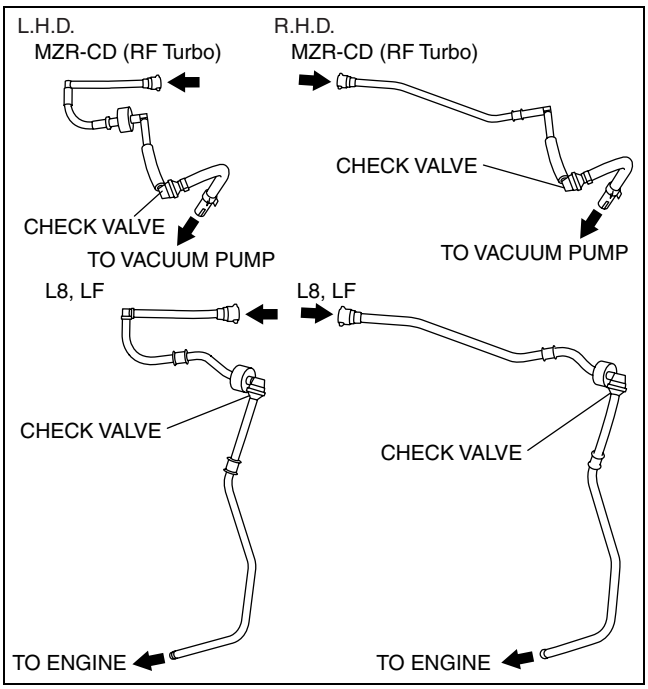

DPE411ZW1002

VACUUM HOSE REMOVAL/INSTALLATION

DPE041143640W03

1. Disconnect the vacuum hose connector from the power brake unit while pressing the tabs of the vacuum hose connector.

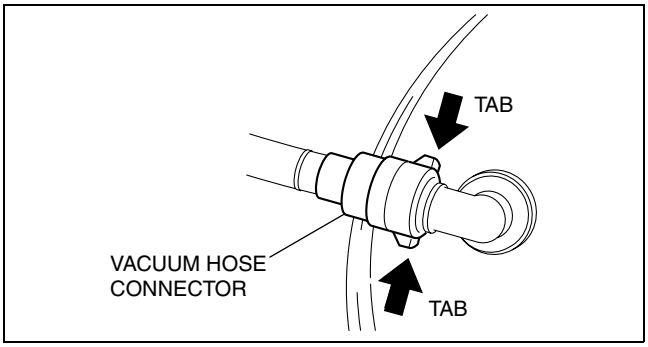

DPE411ZW1003

2. Pinch open the clip using pliers and disconnect the vacuum hose from the vacuum pump. (MZR-CD (RF Turbo))

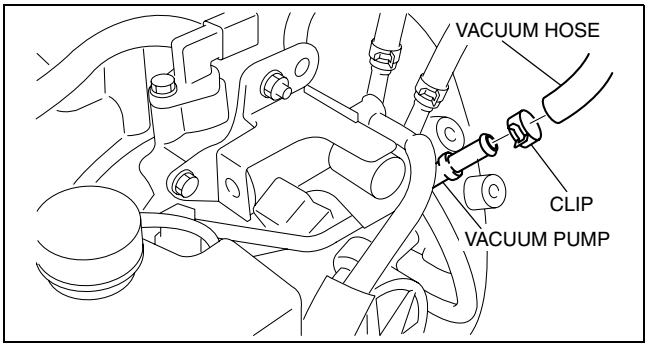

DPE411ZW1004

3. Insert a thin flathead screwdriver at the point indicated by the arrow in the figure, push the ring down and disconnect the vacuum hose from the intake manifold. (L8, LF)
4. Remove the vacuum hose.
5. Install in the reverse order of removal.

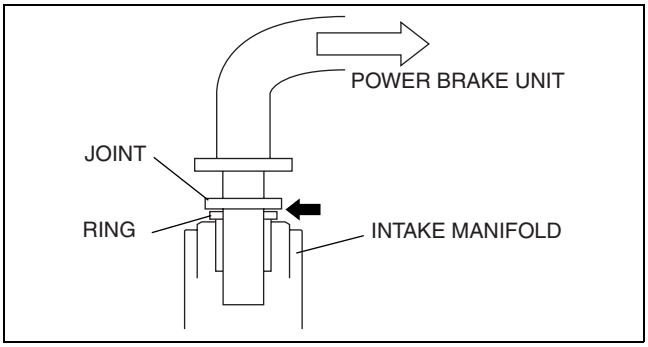

A6U6912W301

6. Verify that the vacuum hose is inserted so that the joint contacts the intake manifold ring. (L8, LF)

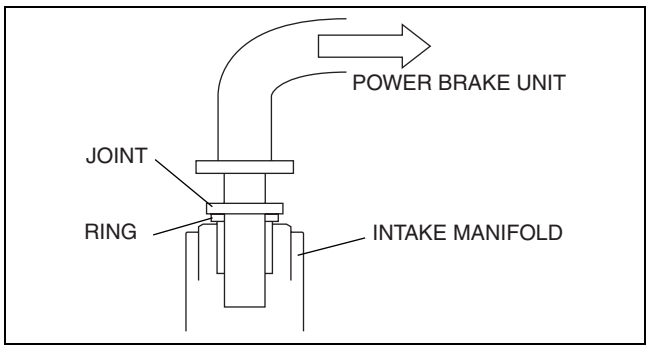

B3E0411W023

7. Verify that the vacuum hose is inserted so that the connector contacts the power brake unit flange.

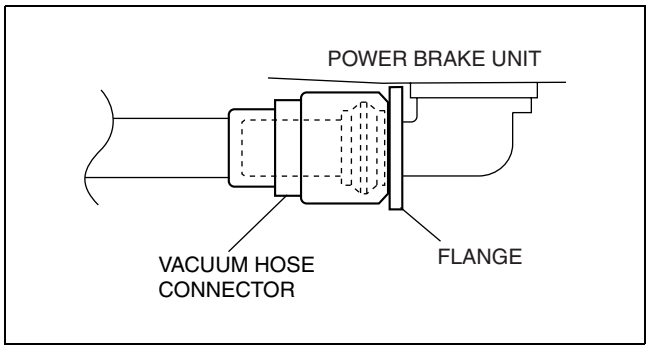

DPE411ZW1026

BRAKE PEDAL INSPECTION

DPE041143300W01

Pedal Height Inspection

1. Measure the distance from the center of the upper surface of the pedal pad to the floor covering and verify that it is as specified.
   - If not within the specification, replace the brake pedal.

   Brake pedal height (reference value)
   136 mm {5.35 in}

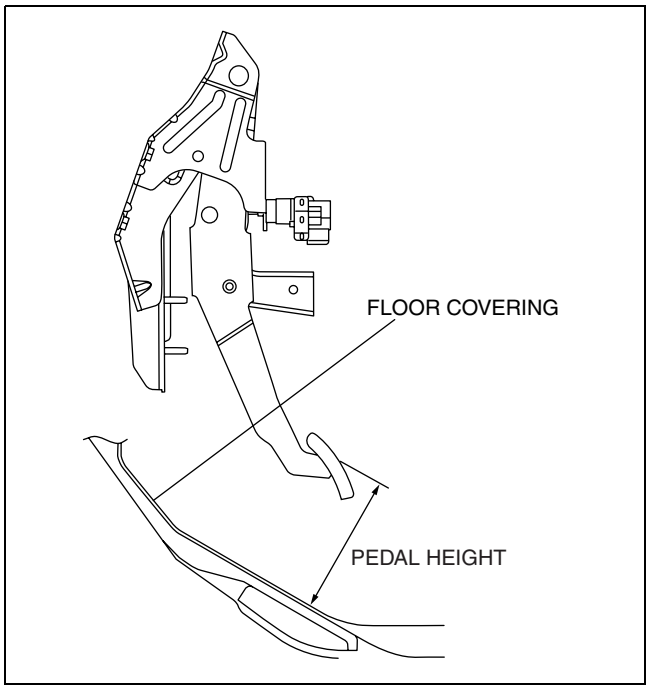

DPE411ZW1005

Pedal Play Inspection

1. Pump the pedal several times to release the vacuum in the power brake unit.
2. Gently depress the pedal by hand and measure the pedal play.
   - If not within the specification, inspect the wear of the clevis pin. Replace it if there is any malfunction.

   Brake pedal play
   2.9—5.5 mm {0.12—0.21 in}

   Note
   - If there is no malfunction in the clevis pin, there is a possibility that the power brake unit has some malfunction. Verify that there are no malfunctions, and replace it if necessary.

Pedal-to-floor Clearance Inspection

1. Start the engine and depress the brake pedal with a force of **147 N {15.0 kgf, 33.0 lbf}**.
2. Measure the distance from the center of the upper surface of the pedal pad to the floor covering and verify that it is as specified.
   - If it is less than the specification, inspect for air in the brake line.

   Brake pedal-to-floor clearance (Brake pedal when depressed at 147 N {15.0 kgf, 33.0 lbf})
   94 mm {3.7 in} or more

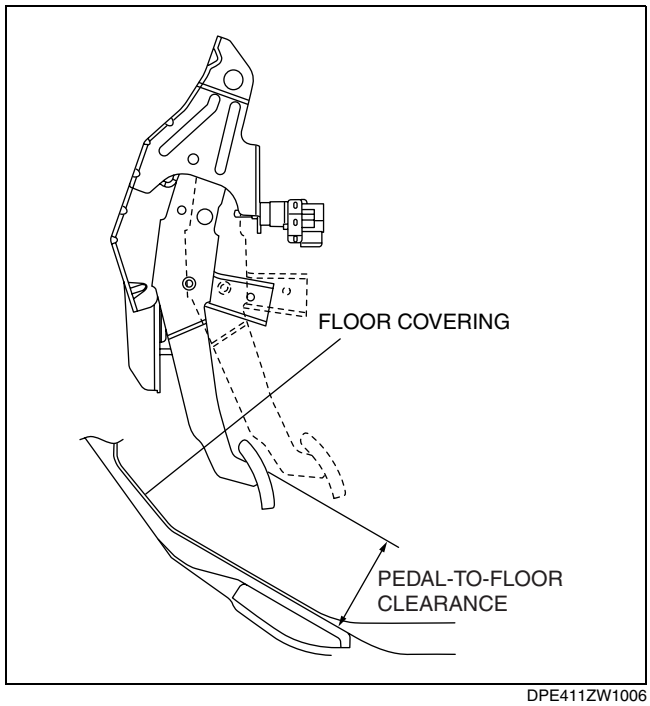

DPE411ZW1006

BRAKE PEDAL REMOVAL/INSTALLATION [L.H.D.]

DPE041143300W02

Caution

- **The clearance between the brake switch and the brake pedal is automatically adjusted to the correct amount when the brake switch is inserted into the installation hole on the brake pedal and rotated to fix in place. If the brake switch is not properly installed, the clearance may be incorrect, causing a brake light malfunction. Therefore, always verify that the brake pedal is properly installed and fully released before installing the brake switch to the pedal.**
- **Once the brake switch clearance has automatically been adjusted, it cannot be adjusted again. Therefore, replace the switch with a new one when replacing the power brake unit or the pedal, or performing any procedure that changes the pedal stroke.**

1. Remove the battery and battery tray. (See 01–17B–1 BATTERY REMOVAL/INSTALLATION [MZR-CD (RF Turbo)].) (See 01–17A–1 BATTERY REMOVAL/INSTALLATION [L8, LF].)
2. Disconnect the brake pipe (master cylinder side). (See 04–11–9 MASTER CYLINDER REMOVAL/INSTALLATION [L.H.D.].)
3. Disconnect the reserve hose (master cylinder side). (MTX) (See 04–11–9 MASTER CYLINDER REMOVAL/INSTALLATION [L.H.D.].)
4. Remove the column cover (under side). (See 09–17–7 COLUMN COVER REMOVAL/INSTALLATION)
5. Remove the accelerator pedal. (See 01–13B–12 ACCELERATOR PEDAL COMPONENT REMOVAL/INSTALLATION [MZR-CD (RF Turbo)].) (See 01–13A–10 ACCELERATOR PEDAL REMOVAL/INSTALLATION [L8, LF].)
6. Remove in the order indicated in the table.
7. Install in the reverse order of removal.

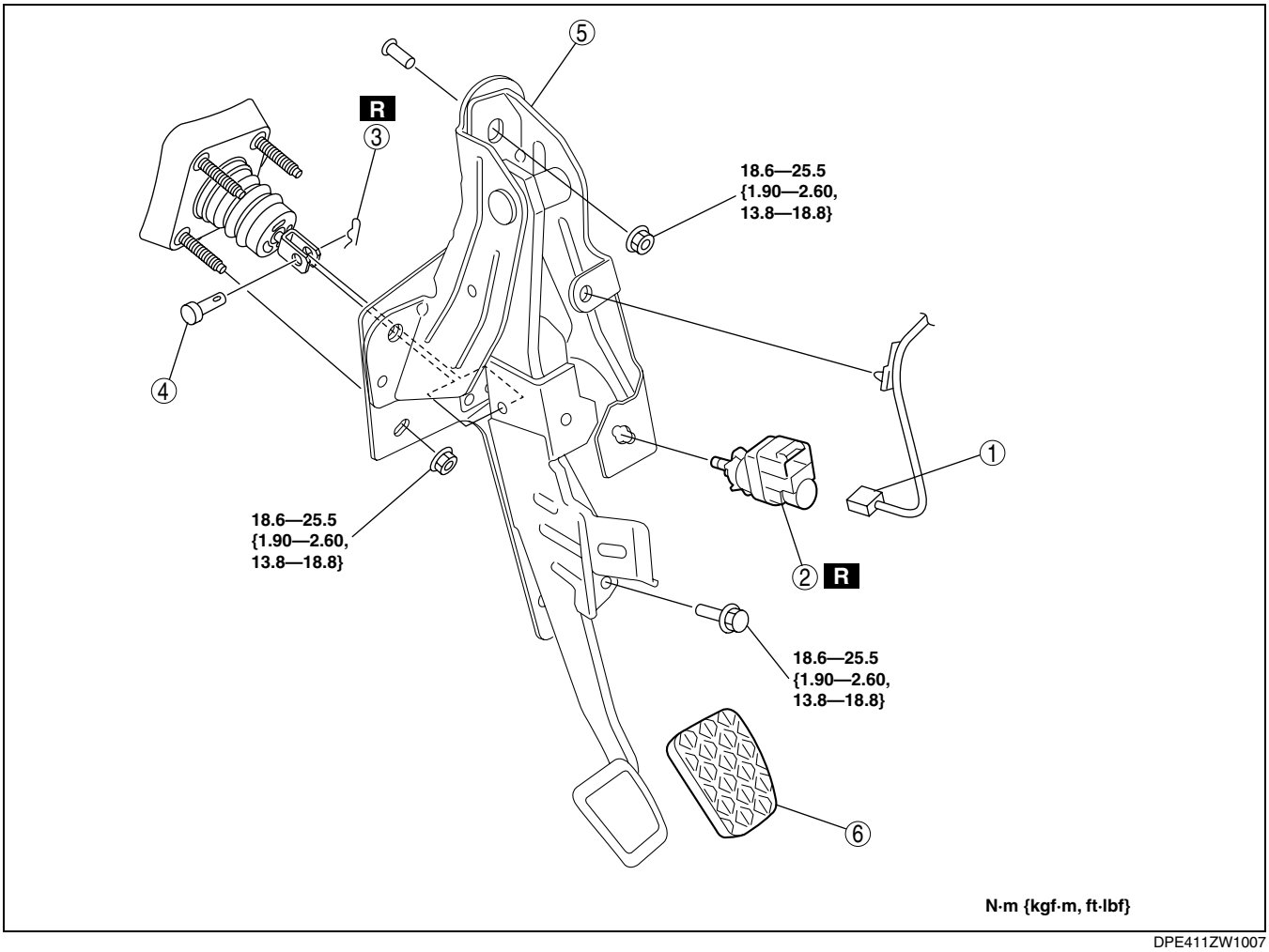

DPE411ZW1007

1	Brake switch connector
2	Brake switch (See 04–11–7 Brake Switch Installation Note.)
3	Spring pin

4	Clevis pin
5	Brake pedal (See 04–11–7 Brake Pedal Removal Note.)
6	Pedal pad

Brake Pedal Removal Note

1. Move the power brake unit to the vehicle front where the power brake unit fork does not interfere with the brake pedal arm.
2. Remove the brake pedal.

Brake Switch Installation Note

1. Inspect the brake pedal. (See 04–11–5 BRAKE PEDAL INSPECTION.)
2. With the brake pedal fully released, insert a new brake switch into the installation hole on the brake pedal.
3. Secure the brake switch by turning it counterclockwise **45**°.

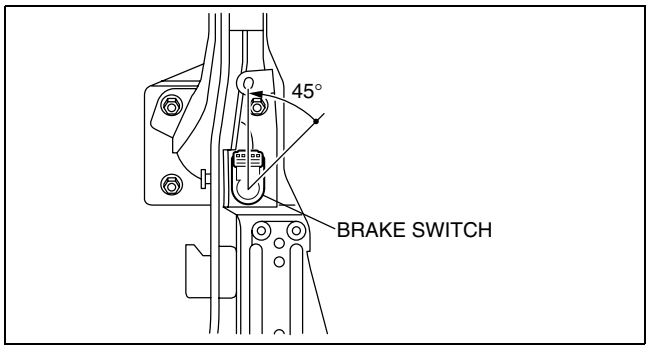

DPE411ZW1008

BRAKE PEDAL REMOVAL/INSTALLATION [R.H.D.]

DPE041143300W03

Caution

- **The clearance between the brake switch and the brake pedal is automatically adjusted to the correct amount when the brake switch is inserted into the installation hole on the brake pedal and rotated to fix in place. If the brake switch is not properly installed, the clearance may be incorrect, causing a brake light malfunction. Therefore, always verify that the brake pedal is properly installed and fully released before installing the brake switch to the pedal.**
- **Once the brake switch clearance has automatically been adjusted, it cannot be adjusted again. Therefore, replace the switch with a new one when replacing the power brake unit or the pedal, or performing any procedure that changes the pedal stroke.**

1. Remove the windshield wiper arm and blade. (See 09–19–3 WINDSHIELD WIPER ARM AND BLADE REMOVAL/INSTALLATION.)
2. Remove the cowl grille. (See 09–16–2 COWL GRILLE REMOVAL/INSTALLATION.)
3. Remove the center cowl grille. (See 09–16–3 CENTER COWL GRILLE REMOVAL/INSTALLATION.)
4. Remove the cowl panel. (See 09–10–11 COWL PANEL REMOVAL/INSTALLATION.)
5. Remove the master cylinder. (See 04–11–11 MASTER CYLINDER REMOVAL/INSTALLATION [R.H.D.].)
6. Remove the accelerator pedal. (See 01–13B–12 ACCELERATOR PEDAL COMPONENT REMOVAL/ INSTALLATION [MZR-CD (RF Turbo)].) (See 01–13A–10 ACCELERATOR PEDAL REMOVAL/INSTALLATION [L8, LF].)
7. Remove in the order indicated in the table.
8. Install in the reverse order of removal.

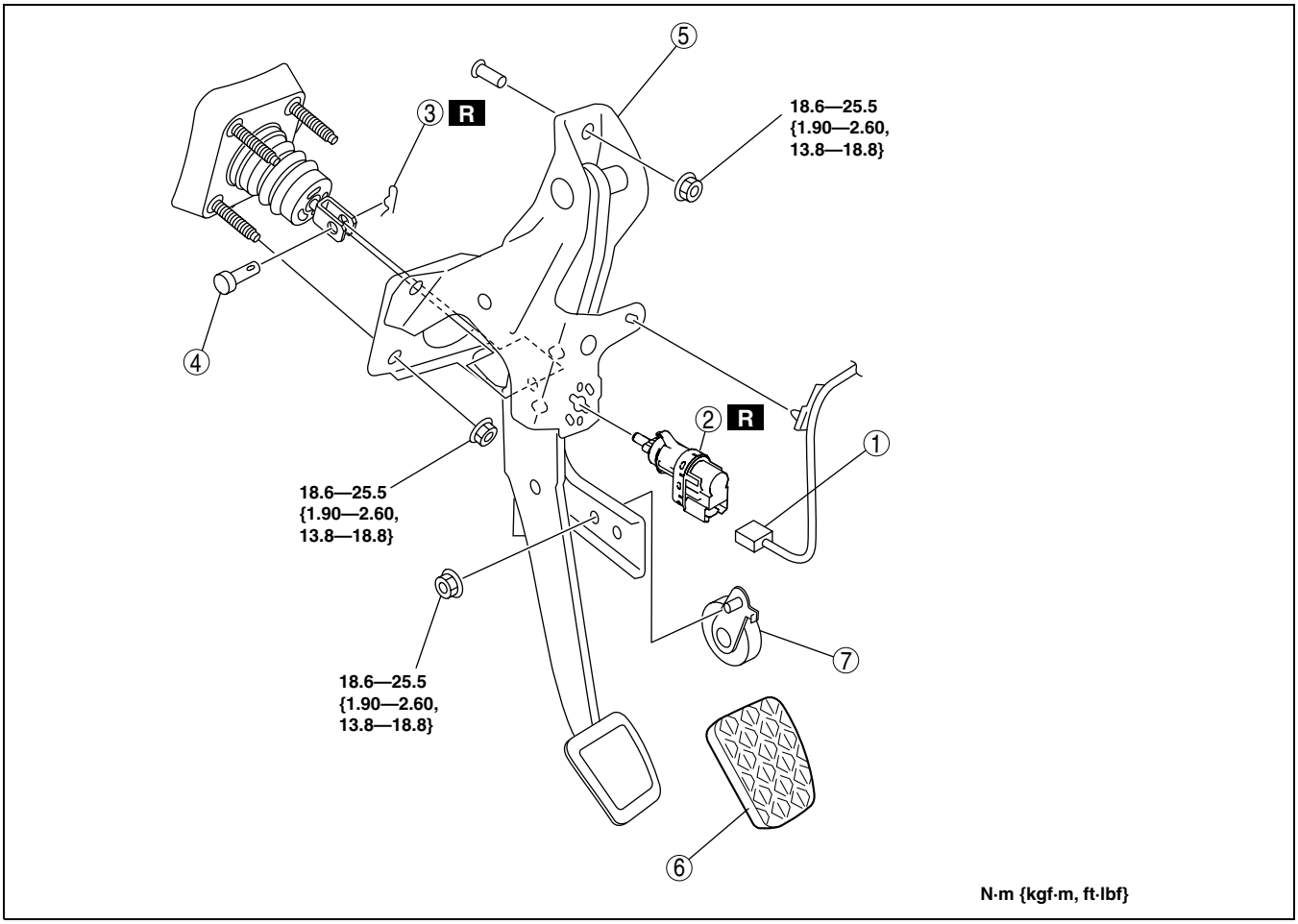

DPE411ZW1009

1	Brake switch connector
2	Brake switch (See 04–11–9 Brake Switch Installation Note.)
3	Spring pin
4	Clevis pin

5	Brake pedal (See 04–11–9 Brake Pedal Removal Note.) (See 04–11–9 Brake Pedal Installation Note.)
6	Pedal pad
7	Dynamic damper

Brake Pedal Removal Note

1. Remove the brake pedal installation nuts.
2. Remove the power brake unit. (See 04–11–14 POWER BRAKE UNIT REMOVAL/INSTALLATION [R.H.D.].)
3. Remove the brake pedal.

Brake Pedal Installation Note

1. Install the brake pedal temporarily using the installation nut on the upper side of the brake pedal.
2. Install the power brake unit. (See 04–11–14 POWER BRAKE UNIT REMOVAL/INSTALLATION [R.H.D.].)
3. Install the brake pedal.

Brake Switch Installation Note

1. Inspect the brake pedal. (See 04–11–5 BRAKE PEDAL INSPECTION.)
2. With the brake pedal fully released, insert a new brake switch into the installation hole on the brake pedal.
3. Secure the brake switch by turning it counterclockwise **45**°.

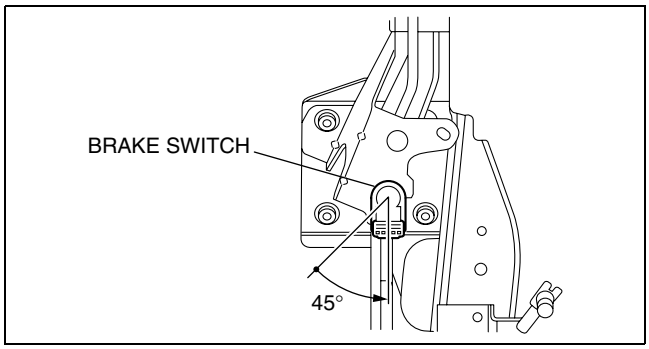

DPE411ZW1010

BRAKE SWITCH INSPECTION

DPE041166490W01

Caution

- **Inspect the brake switch with it installed to the brake pedal, otherwise the brake switch may not operate normally. If the brake switch is removed from the brake pedal, replace the brake switch with a new one.**

1. Remove the lower panel.
2. Remove the column cover.
3. Disconnect the brake switch connector.
4. Verify that the continuity is as indicated in the table.
   - If not as indicated in the table, replace the brake switch.

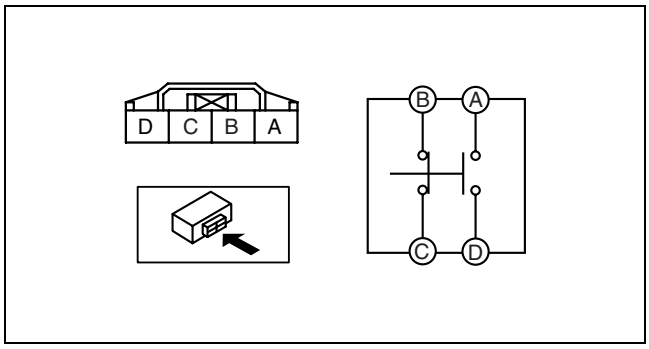

C3U0411W005

○—○ : Continuity

Condition	Terminal			
	A	B	C	D
When the brake pedal is depressed	○			○
When the brake pedal is not depressed (With auto cruise)		○	○	

DPE411ZW1011

MASTER CYLINDER REMOVAL/INSTALLATION [L.H.D.]

DPE041143400W01

1. Remove the battery and battery tray. (See 01–17B–1 BATTERY REMOVAL/INSTALLATION [MZR-CD (RF Turbo)].) (See 01–17A–1 BATTERY REMOVAL/INSTALLATION [L8, LF].)

2. Remove in the order indicated in the table.
3. Install in the reverse order of removal.

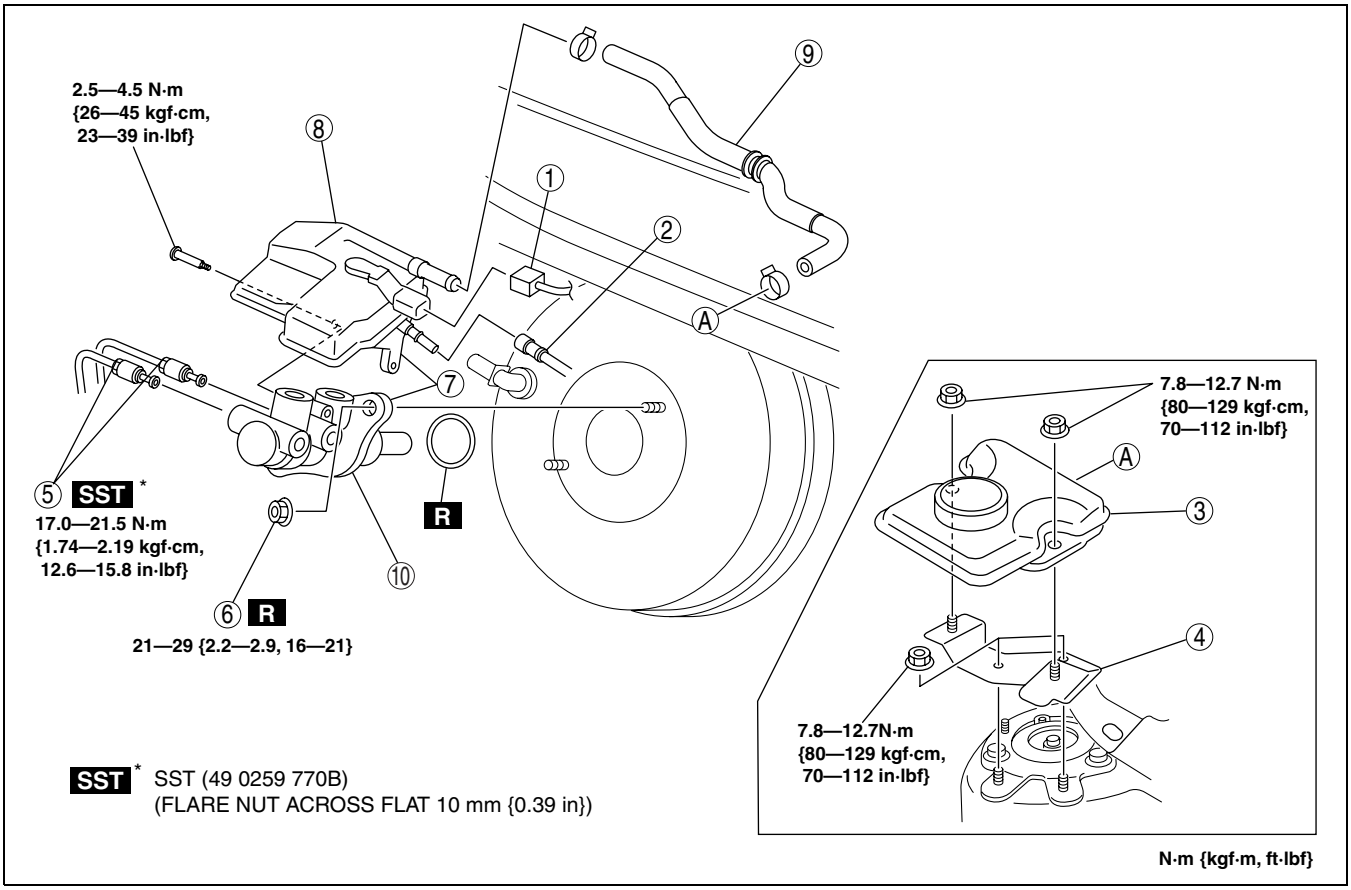

DPE411ZW1012

1	Brake fluid level sensor connector
2	Reserve hose (MTX) (See 04–11–10 Reserve Hose (MTX) Removal Note.) (See 04–11–10 Reserve Hose (MTX) Installation Note.)
3	No.1 reserve tank, cap
4	Reserve tank bracket

5	Brake pipe
6	Nut
7	Master cylinder component
8	No.2 reserve tank, cap
9	Reserve tank hose
10	Master cylinder

Reserve Hose (MTX) Removal Note

1. Remove the reserve hose from the reserve tank while pressing the point indicated by the arrow in the figure.

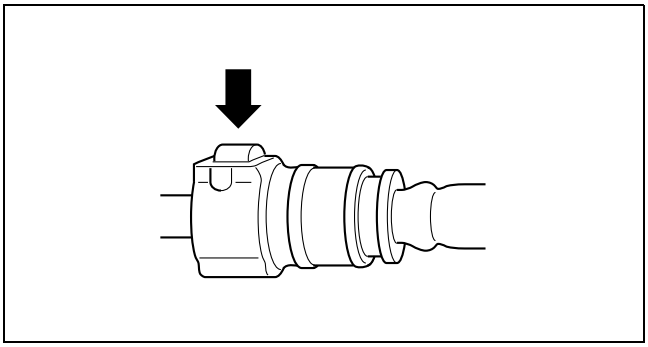

B3E0411W006

Reserve Hose (MTX) Installation Note

1. Insert the reserve hose to the reserve tank until a click is heard.
2. Verify that the reserve hose is firmly installed by pulling it, and push it into the reserve tank again.

MASTER CYLINDER REMOVAL/INSTALLATION [R.H.D.]

DPE041143400W03

1. Remove in the order indicated in the table.
2. Install in the reverse order of removal.

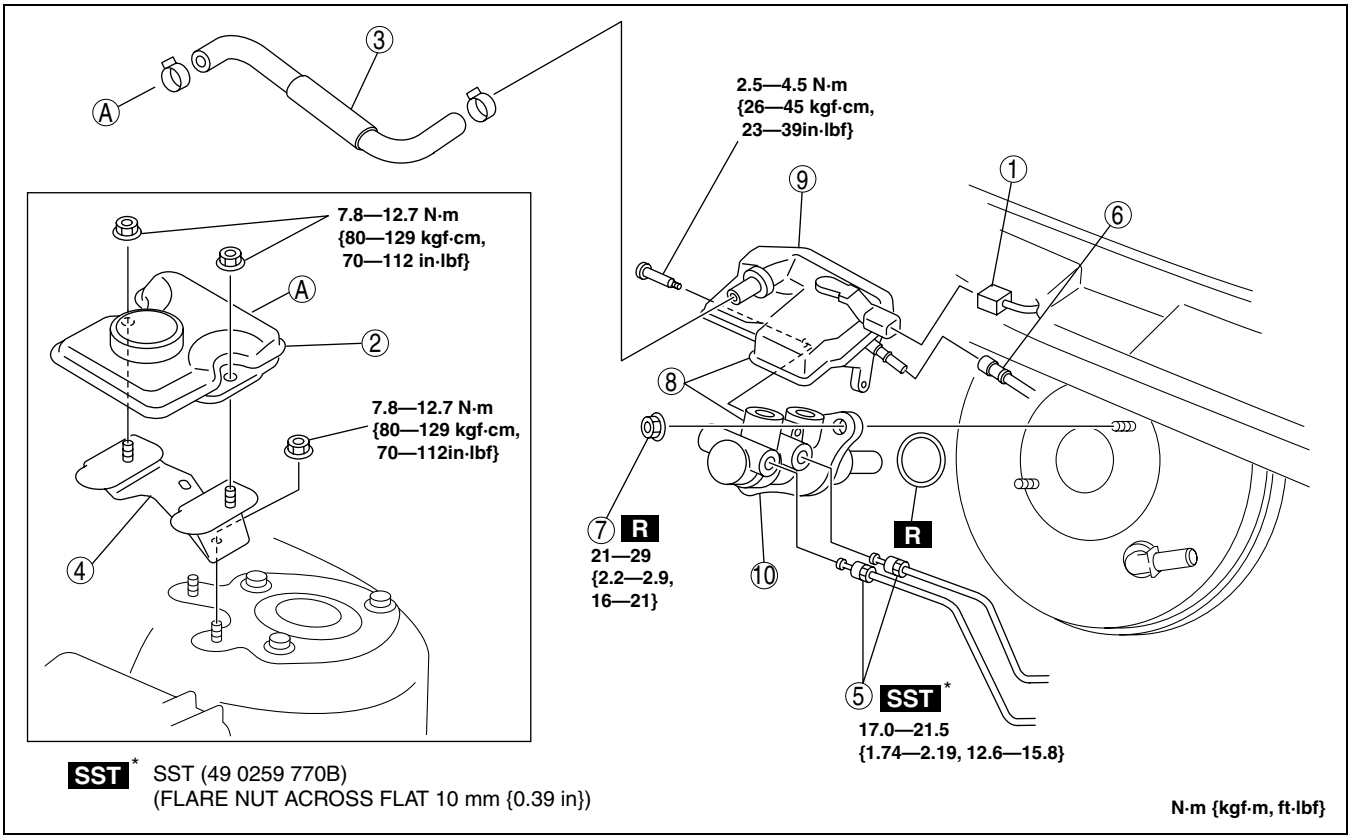

DPE411ZW1013

1	Brake fluid level sensor connector
2	No.1 reserve tank, cap
3	Reserve tank hose
4	Reserve tank bracket
5	Brake pipe

6	Reserve hose (MTX) (See 04–11–10 Reserve Hose (MTX) Removal Note.) (See 04–11–10 Reserve Hose (MTX) Installation Note.)
7	Nut
8	Master cylinder component
9	No.2 reserve tank
10	Master cylinder

BRAKE FLUID LEVEL SENSOR INSPECTION

DPE041143400W02

1. Disconnect the brake fluid level sensor connector from the master cylinder.
2. Inspect for continuity according to fluid level between the brake fluid level sensor terminals.
   - If not as indicated in the table, replace the No.2 reserve tank.

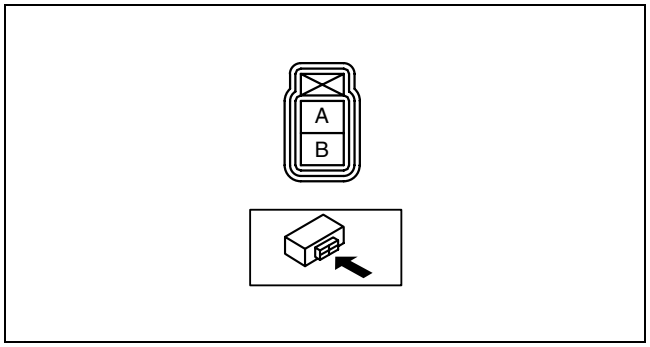

B3E0411W039

○—○: Continuity

Condition	Terminal	
	A	B
Above MIN	○	○
Below MIN		

B3E0411W105

POWER BRAKE UNIT INSPECTION

DPE041143800W01

Note
- The following inspection methods are simple inspection methods to judge the function of the power brake unit.
- If there is any malfunction in the power brake unit, replace the power brake unit as a single unit.

Without Using SST
Operation inspection
1. With the engine stopped, pump the pedal a few times.
2. With the pedal depressed, start the engine.
3. If the pedal moves down slightly immediately after starting the engine, the unit is normal.

Vacuum function inspection
1. Start the engine.
2. Stop the engine after driving the vehicle for **1—2 min**.
3. Depress the pedal with normal force.
4. If the first pedal stroke is long and becomes shorter with subsequent strokes, the unit is normal.
   - If a problem is found, inspect for damage to or improper installation of the check valve and vacuum hose. After repairing, inspect again.

Vacuum loss function inspection
1. Start the engine.
2. Depress the pedal with normal force.
3. With the pedal depressed, stop the engine.
4. Hold the pedal depressed for **approx. 30 s**.
5. If the pedal height does not change during this time, the unit is normal.

Using SST
Pre-inspection preparation
1. Install the **SST** (49 D043 0A0) to the master cylinder in the orientation shown in the figure.

   Note
   - When installing the **SST** (49 D043 0A0) to the master cylinder, use a commercially available flare nut wrench.
     — Flare nut across flat: **12 mm {0.47 in}**

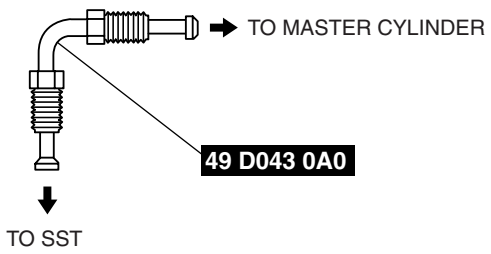

B3E0411W111

2. Connect the **SSTs**, a vacuum gauge, and a pedal force gauge to the master cylinder, and bleed the air from the **SSTs** and the brake line. (Bleed the air from the **SSTs** using air bleed valve A.)

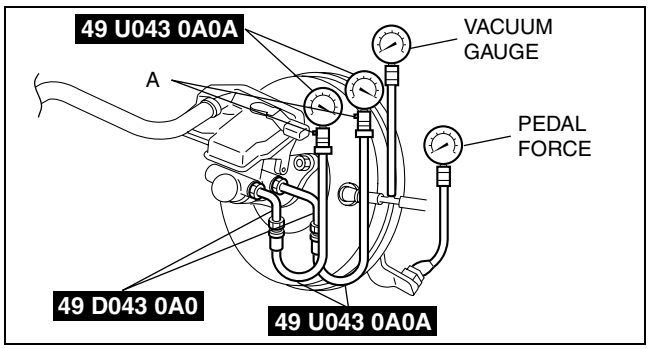

DPE411ZW1014

Vacuum loss inspection
1. Start the engine.
2. Depress the brake pedal with a force of **200 N {20.4 kgf, 44.9 lbf}**.
3. Stop the engine when the vacuum gauge reading reaches **68 kPa {510 mmHg, 20.1 inHg}** with the pedal depressed.
4. With the engine off, observe the vacuum gauge for **15 s**.
5. If the gauge has dropped **3.3 kPa {25 mmHg, 1.0 inHg}** or less, the unit is normal.

Lack of hydraulic pressure inspection
1. If the pedal force and fluid pressure correlation is within the specification with the engine stopped and a vacuum amount of **0 kPa {0 mmHg, 0 inHg}**, the system is normal.

   Power brake unit fluid pressure when pedal depressed at 200 N {20.4kgf, 44.9lbt}
   At 0 kpa {0 mmHg, 0 inHg}: 550 kPa {5.61 kgf/cm^2, 79.8 psi} or more

Hydraulic pressure inspection
1. Start the engine. Depress the brake pedal when the vacuum reaches **66.7 kPa {500 mmHg, 19.7 inHg}**.
2. At this time, apply the indicated pedal force and if the fluid pressure is within the specification, the unit is normal.

   Power brake unit fluid pressure when pedal depressed at 200 N {20.4kgf, 44.9lbt}
   At 66.7 kpa {500 mmHg, 19.7 inHg}: 6.950 kPa {70.88 kgf/cm^2, 1.009 psi} or more

POWER BRAKE UNIT REMOVAL/INSTALLATION [L.H.D.]

DPE041143800W02

1. Remove the battery and battery tray. (See 01–17B–1 BATTERY REMOVAL/INSTALLATION [MZR-CD (RF Turbo)].) (See 01–17A–1 BATTERY REMOVAL/INSTALLATION [L8, LF].)
2. Remove the master cylinder. (See 04–11–9 MASTER CYLINDER REMOVAL/INSTALLATION [L.H.D.].)
3. Remove in the order indicated in the table.
4. Install in the reverse order of removal.
5. Inspect the brake pedal. (See 04–11–5 BRAKE PEDAL INSPECTION.)

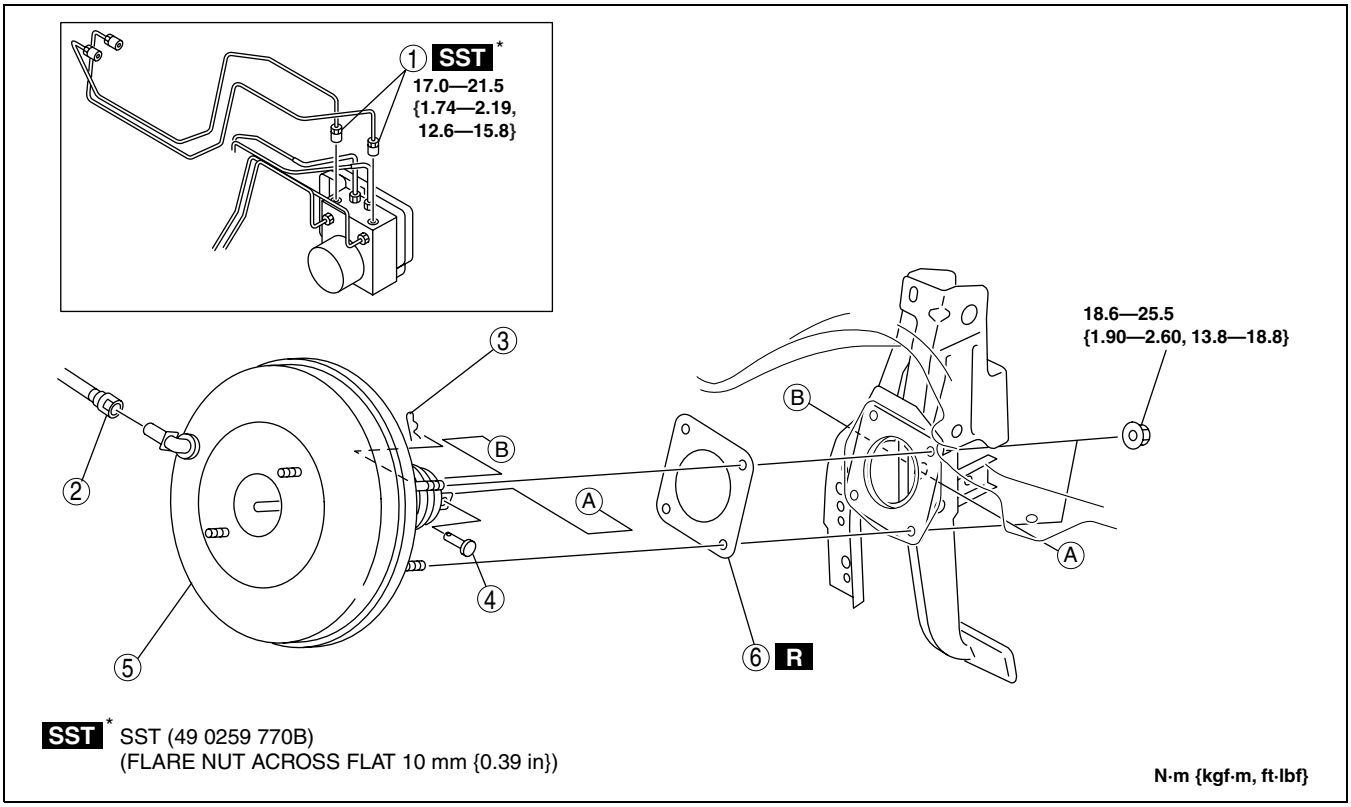

DPE411ZW1015

1	Brake pipe
2	Vacuum hose (See 04–11–4 VACUUM HOSE REMOVAL/ INSTALLATION.)

3	Spring pin
4	Clevis pin
5	Power brake unit
6	Gasket

POWER BRAKE UNIT REMOVAL/INSTALLATION [R.H.D.]

DPE041143800W03

1. Remove the windshield wiper arm and blade. (See 09–19–3 WINDSHIELD WIPER ARM AND BLADE REMOVAL/INSTALLATION.)
2. Remove the cowl grille. (See 09–16–2 COWL GRILLE REMOVAL/INSTALLATION.)
3. Remove the center cowl grille. (See 09–16–3 CENTER COWL GRILLE REMOVAL/INSTALLATION.)
4. Remove the cowl panel. (See 09–10–11 COWL PANEL REMOVAL/INSTALLATION.)
5. Remove the master cylinder. (See 04–11–11 MASTER CYLINDER REMOVAL/INSTALLATION [R.H.D.].)
6. Perform the following procedure and move the cooler hose (LO) under the vehicle.
   (1) Disconnect the HO2S connector. (L8, LF)
   (2) Remove the bracket. (L8, LF)
   (3) Remove the cooler hose bracket.
7. Remove the accelerator pedal. (See 01–13B–12 ACCELERATOR PEDAL COMPONENT REMOVAL/INSTALLATION [MZR-CD (RF Turbo)].) (See 01–13A–10 ACCELERATOR PEDAL REMOVAL/INSTALLATION [L8, LF].)
8. Remove in the order indicated in the table.
9. Install in the reverse order of removal.

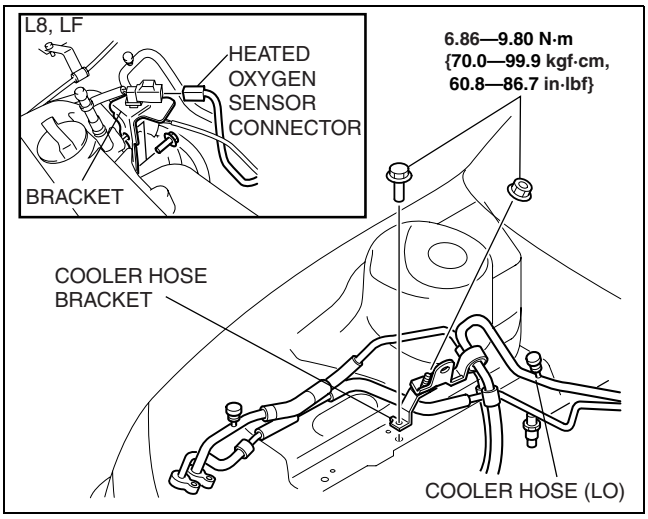

DPE411ZW1016

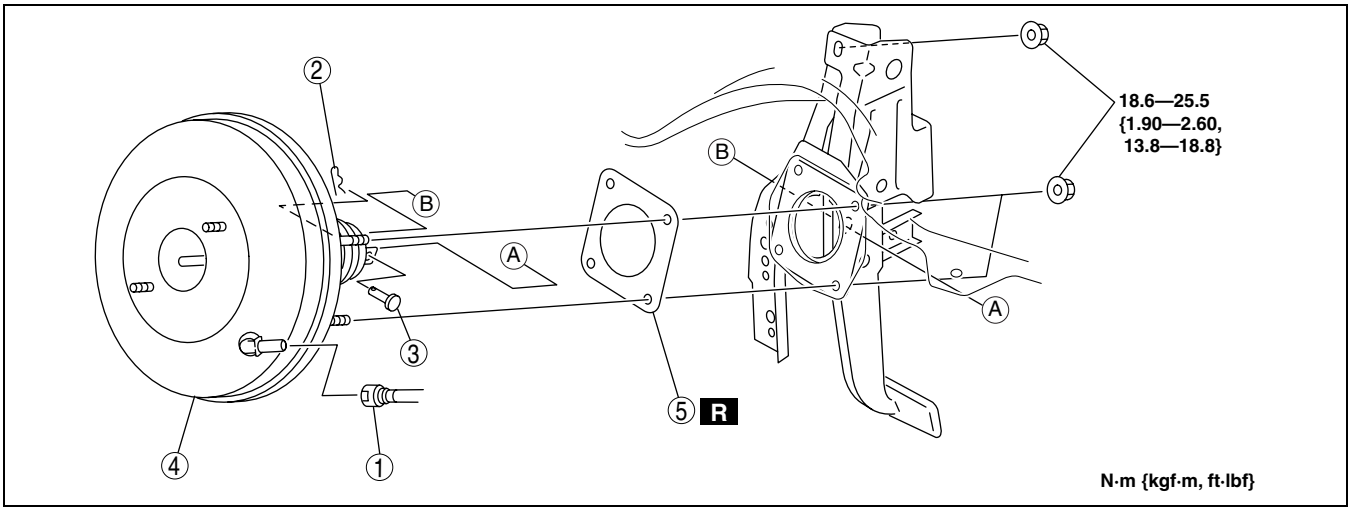

DPE411ZW1017

1	Vacuum hose (See 04–11–4 VACUUM HOSE REMOVAL/ INSTALLATION.)
2	Spring pin
3	Clevis pin
4	Power brake unit (See 04–11–15 Power brake unit Removal Note.)
5	Gasket

Power brake unit Removal Note

1. Remove the brake pedal installation nuts.
2. Remove the power brake unit.

VACUUM PUMP INSPECTION [MZR-CD (RF TURBO)]

DPE041118777W01

04

1. Warn up the engine.
2. Disconnect the vacuum hose from the vacuum pump and connect a vacuum gauge as shown in the figure, then check the vacuum.
   - If the pressure is less than the specification, inspect for the following.
     — Malfunction of the vacuum pump
     — Shortage of the lubrication oil pressure

   Vacuum specification (In 8 s)
   Engine speed 750 rpm: 66.6 kPa {500 mmHg, 19.7 inHg} or more
   Maximum vacuum
   Engine speed 750 rpm: 93.3 kPa {700 mmHg, 27.6 inHg} or more

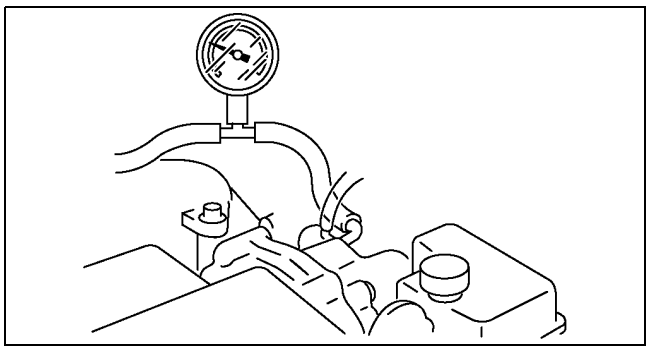

B6E411ZWC001

VACUUM PUMP REMOVAL/INSTALLATION [MZR-CD (RF TURBO)]

DPE041118777W02

1. Remove the battery and battery tray. (See 01–17B–1 BATTERY REMOVAL/INSTALLATION [MZR-CD (RF Turbo)].)
2. Remove the air cleaner. (See 01–13B–4 INTAKE-AIR SYSTEM REMOVAL/INSTALLATION [MZR-CD (RF Turbo)].)

3. Remove the vacuum pipe.

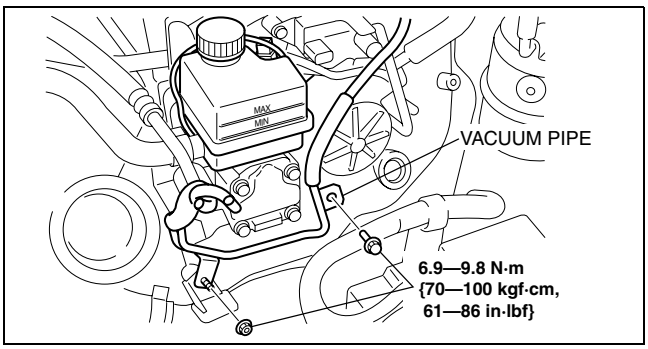

DPE411ZW1018

4. Remove the nut and bolt shown in the figure, and move the air pipe.

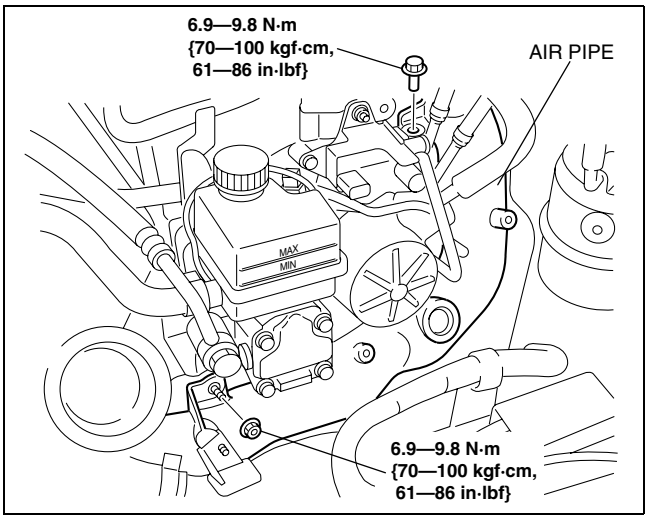

DPE411ZW1019

5. Remove the VBC solenoid valve.

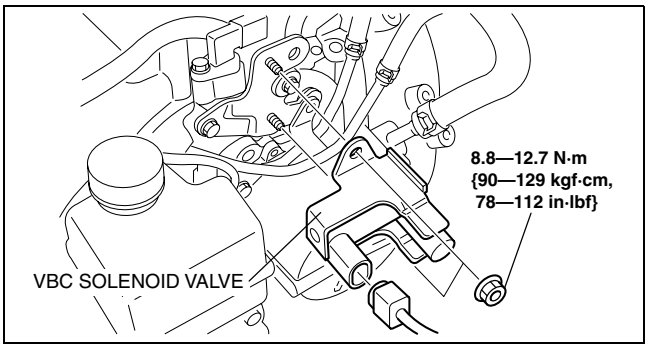

DPE411ZW1020

6. Remove the nut shown in the figure, and move the fuel pipe.

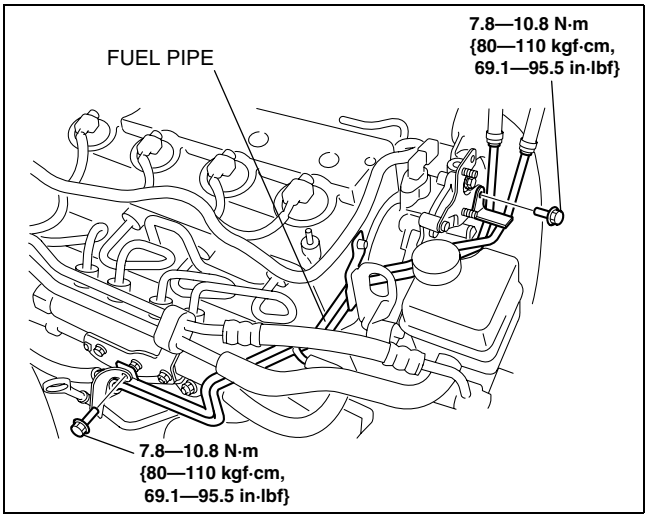

DPE411ZW1021

7. Remove in the order indicated in the table.

1	Vacuum hose
2	Bolt
3	Vacuum pump (See 04–11–17 Vacuum Pump Installation Note)
4	O-ring

8. Install in the reverse order of removal.

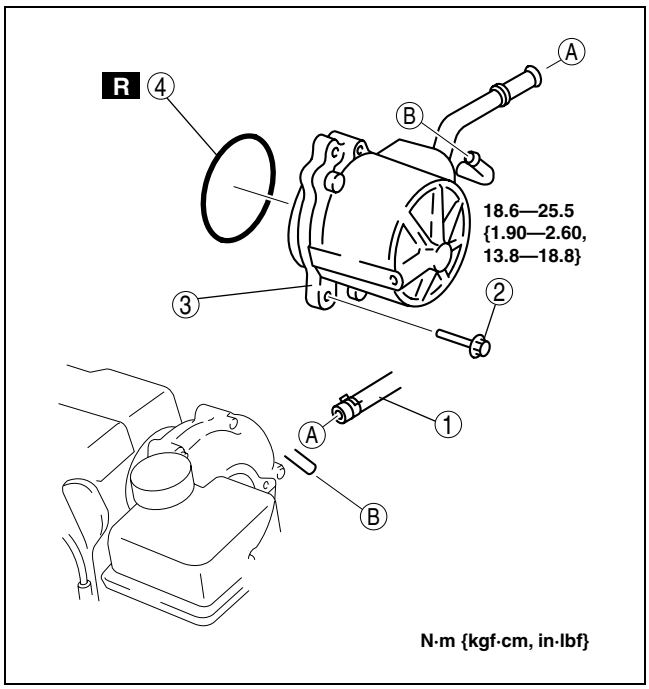

DPE411ZW1022

Vacuum Pump Installation Note
1. Be careful the O-ring is not pinched when installing the vacuum pump.

FRONT BRAKE (DISC) INSPECTION

DPE041133980W01

04

Brake Judder Repair Hints
Description
1. Brake judder concern has the following 3 characteristics:

Steering wheel vibration
1. The steering wheel vibrates in the rotation direction. This characteristic is most noticeable when applying brakes at a vehicle speed of **100—140 km/h {62.1—86.8 mph}**.

Floor vibration
1. When applying the brakes, the vehicle body shakes back and forth. The seriousness of the shaking is not influenced by vehicle speed.

Brake pedal vibration
1. When applying the brakes, a pulsating force tries to push the brake pad back. The pulsation is transmitted to the brake pedal.
2. The following are the main possible causes of brake judder:

Due to an excessive runout (side-to-side wobble) of the disc plate, the thickness of the disc plate is uneven.
1. If the runout is **more than 0.04 mm {0.0016 in}** at the position **10 mm {0.39 in}** from the disc plate edge, uneven wear occurs on the disc plate because the pad contacts the plate unevenly.
2. If the runout is **less than 0.04 mm {0.0016 in}**, uneven wear does not occur.

The disc plate is deformed by heat.
1. Repeated panic braking may raise the temperature in some portions of the disc plate by **approx. 1,000 °C {1,832 °F}**. This results in a deformed disc plate.

Due to corrosion, the thickness and friction coefficient of the disc plate change.
1. If the vehicle is parked in damp conditions for a long time, corrosion occurs on the friction surface of the disc plate.
2. The thickness of corrosion is uneven and sometimes appears like a wave pattern, which changes the friction coefficient and causes a reaction force.

Inspection and repair procedure

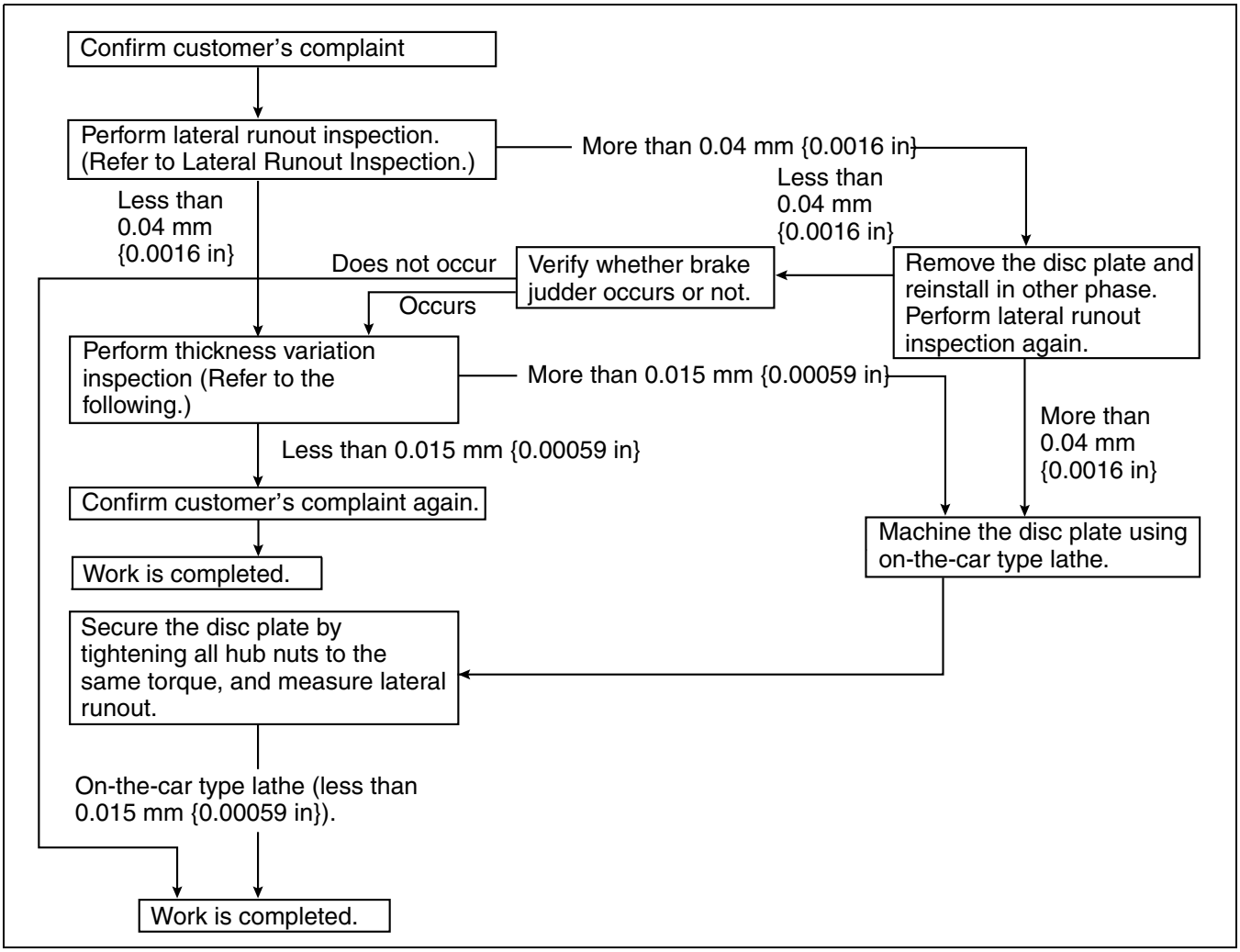

DPE411ZW1023

Lateral runout inspection

1. To secure the disc plate and the hub, insert the washer (thickness **10 mm {0.39 in}**, inner diameter **more than 12 mm {0.47 in}**) between each hub bolt and the hub nut, then tighten all the hub nuts.

   Note
   - The component parts of the **SST** (49 B017 001 or 49 G019 003) can be used as a suitable washer.

2. After tightening all the hub nuts to the same torque, put the dial gauge on the friction surface of the disc plate **10 mm {0.39 in}** from the disc plate edge.
3. Rotate the disc plate one time and measure the runout.

   Front disc plate runout limit
   0.04 mm {0.0016 in}

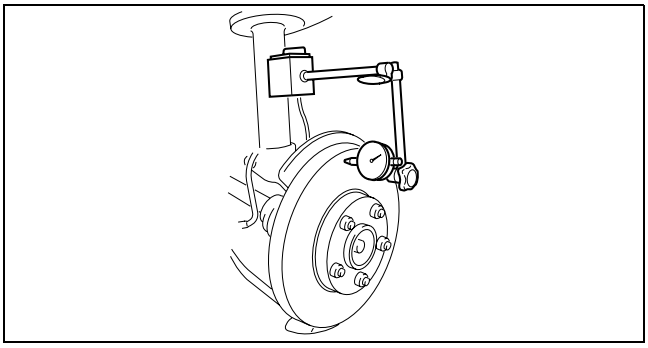

B3E0411W013

Thickness variation inspection

1. Clean the disc plate-to-pad friction surface using a brake cleaner.

2. Measure the points indicated in the illustration using a caliper (micrometer).
3. Subtract the minimum value from the maximum, and if the result is not within the specification, machine the disc plate using a lathe.

Thickness variation limit
0.015 mm {0.00059 in}

Warning
- **Do not exceed minimum disc plate thickness.**

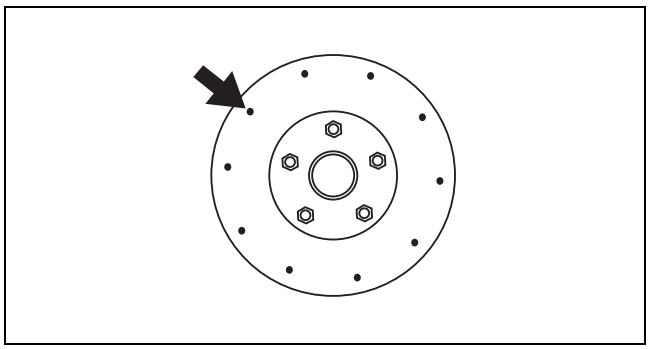

CHU0411W027

Disc Plate Thickness Inspection

Caution
- **Excessive runout may result if the disc plate is removed from the vehicle then machined. Machine the disc plate while installed on the vehicle.**

1. Measure the thickness of the disc plate.
   - If the thickness is not within the specification, replace the disc plate.

Minimum front disc plate thickness
23 mm {0.91 in}

Minimum front disc plate thickness after machining using a brake lathe on-vehicle
23.8 mm {0.94 in}

Disc Pad Thickness Inspection
1. Jack up the front of the vehicle and support it with safety stands.
2. Remove the wheels and tires.
3. Verify the remaining thickness of the pads.

Minimum front disc pad thickness
2.0 mm {0.079 in} min.

4. Replace the pads as a set (right and left wheels) if either one is at or less than the minimum thickness.

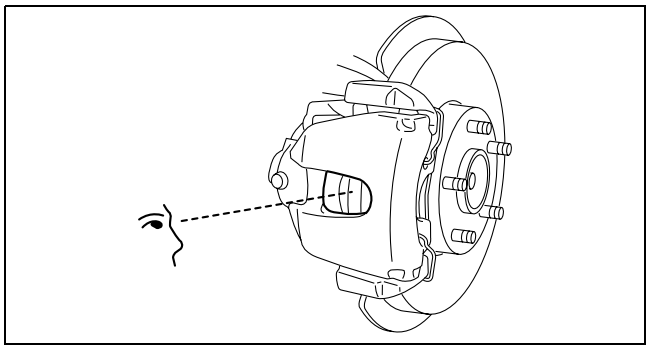

B3E0411W015

FRONT BRAKE (DISC) REMOVAL/INSTALLATION

DPE041133980W02

1. Remove in the order indicated in the table.
2. Install in the reverse order of removal.

3. After installation, pump the brake pedal a few times and verify that the brakes do not drag.

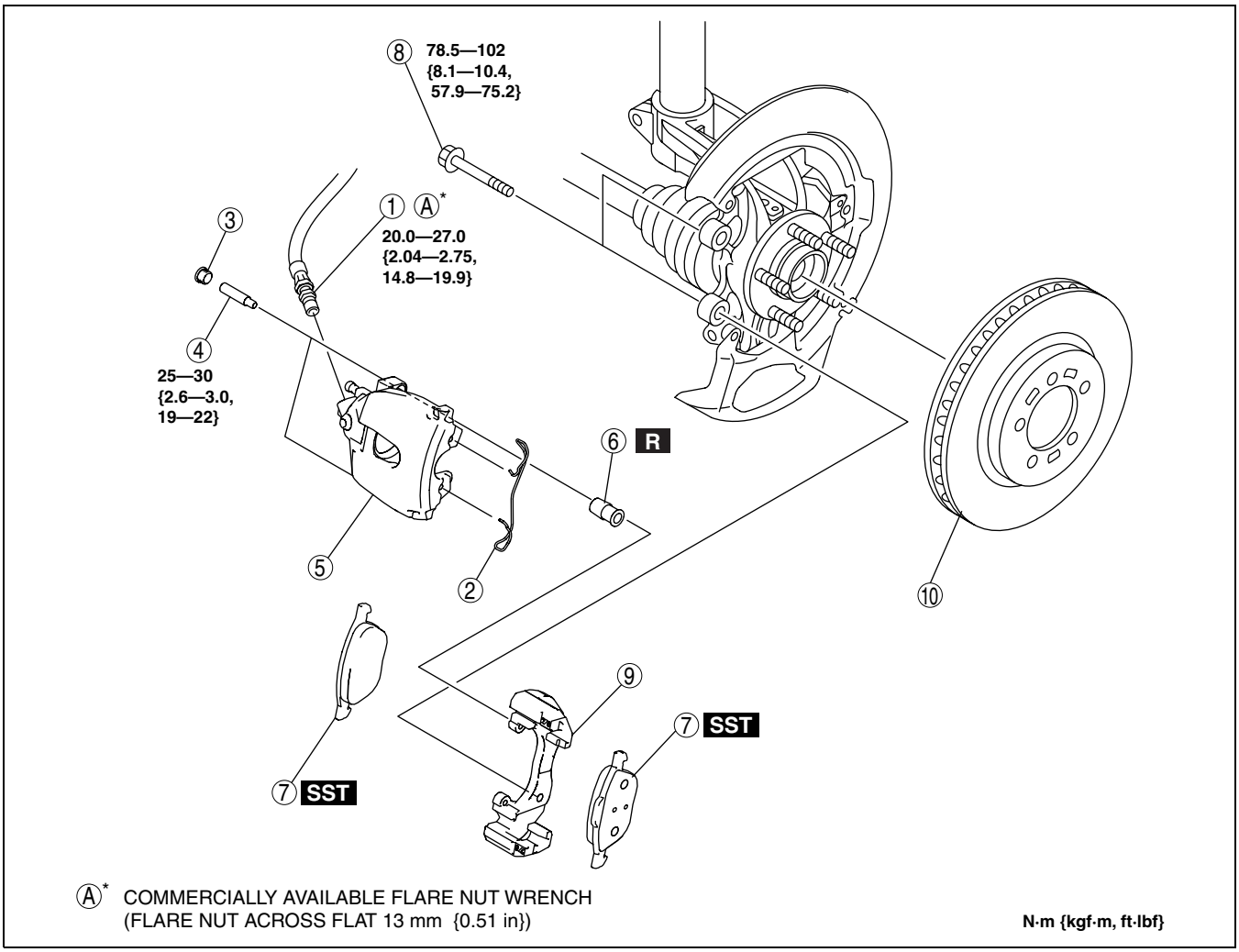

DPE411ZW1024

1	Brake hose (See 04–11–21 Brake Hose Installation Note.)
2	Retaining clip (See 04–11–21 Retaining Clip Installation Note.)
3	Cap
4	Bolt
5	Caliper

6	Boot
7	Disc pad (See 04–11–20 Disc Pad Installation Note.)
8	Bolt
9	Mounting support
10	Disc plate

Disc Pad Installation Note

1. Clean the exposed area of the piston.
2. Push the piston in using the **SST**.
3. Install the disc pad (outer side) to the mounting support.
4. Install the disc pad (inner side) to the caliper.

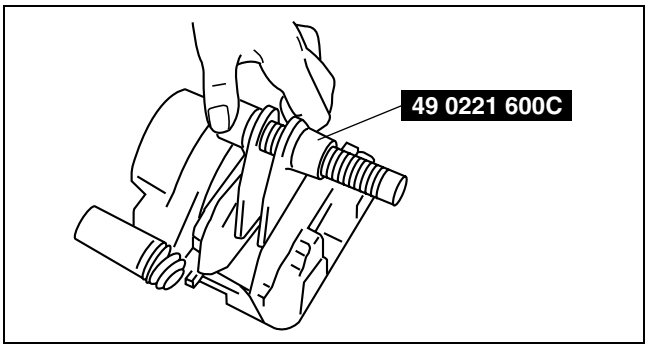

A6E6912W038

Retaining Clip Installation Note

1. Temporarily install the retaining clip to the caliper and mounting support as shown in the figure.

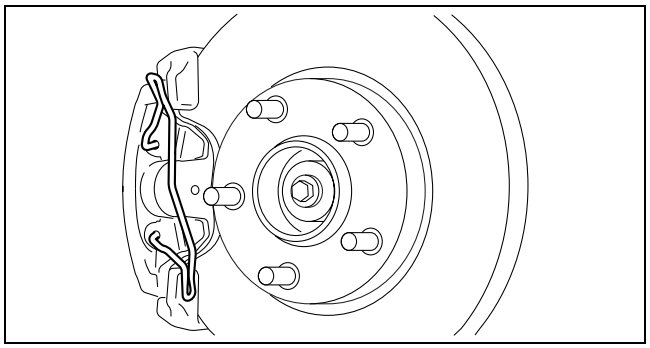

B3A0411W017

2. Secure the retaining clip so that part A does not slip off from the caliper while installing part B to the mounting support.
3. Verify that the retaining clip is securely installed to the caliper and the mounting support.

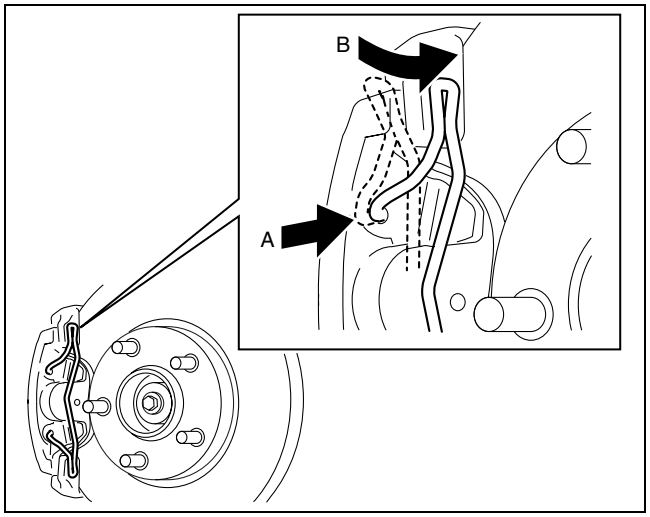

B3A0411W016

Brake Hose Installation Note

1. Install the brake hose to the caliper.
2. Tighten the flare nut while holding the brake hose at point A with a spanner or equivalent.
3. Verify that the brake hose is not twisted.

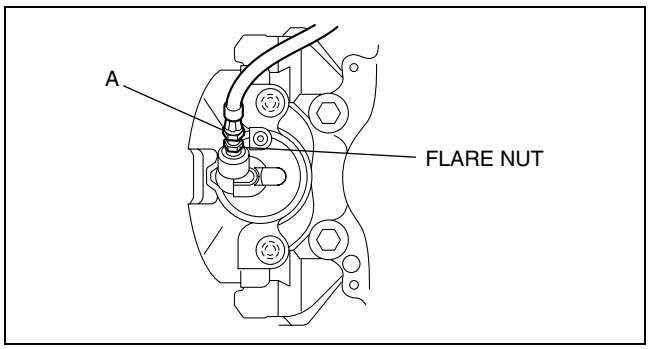

B3E0411W043

DISC PAD (FRONT) REPLACEMENT

DPE041133630W01

1. Remove in the order indicated in the table.
2. Install in the reverse order of removal.

3. After installation, pump the brake pedal a few times and verify that the brakes do not drag.

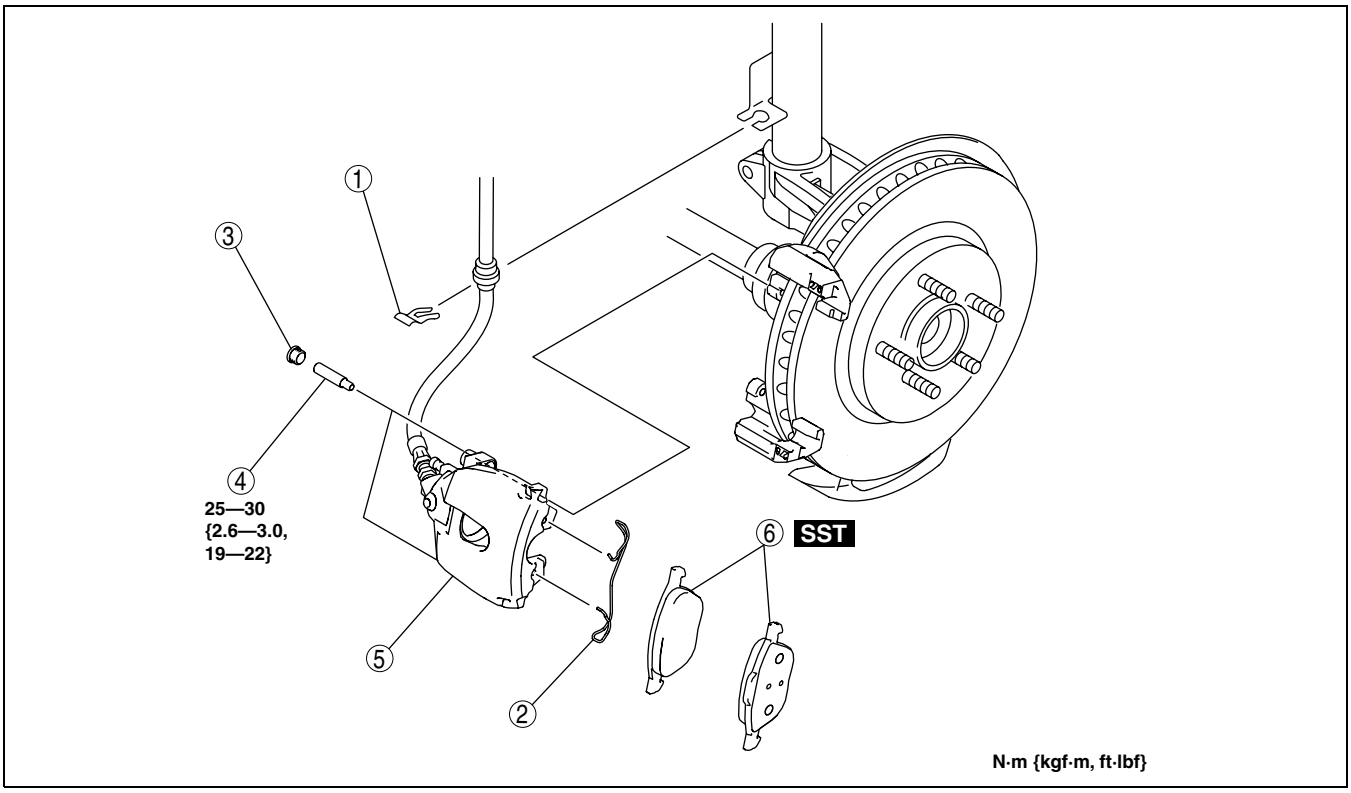

B3E0411W044

1	Clip
2	Retaining clip (See 04–11–21 Retaining Clip Installation Note.)
3	Cap

4	Bolt
5	Caliper
6	Disc pad (See 04–11–20 Disc Pad Installation Note.)

CALIPER (FRONT) DISASSEMBLY/ASSEMBLY

1. Disassemble in the order indicated in the table.

1	Bleeder cap
2	Bleeder screw
3	Piston (See 04–11–23 Piston Disassembly Note.) (See 04–11–23 Piston Assembly Note.)
4	Dust seal (See 04–11–23 Dust Seal Assembly Note.)
5	Piston seal
6	Caliper body

2. Assemble in the reverse order of disassembly.

DPE041133990W01

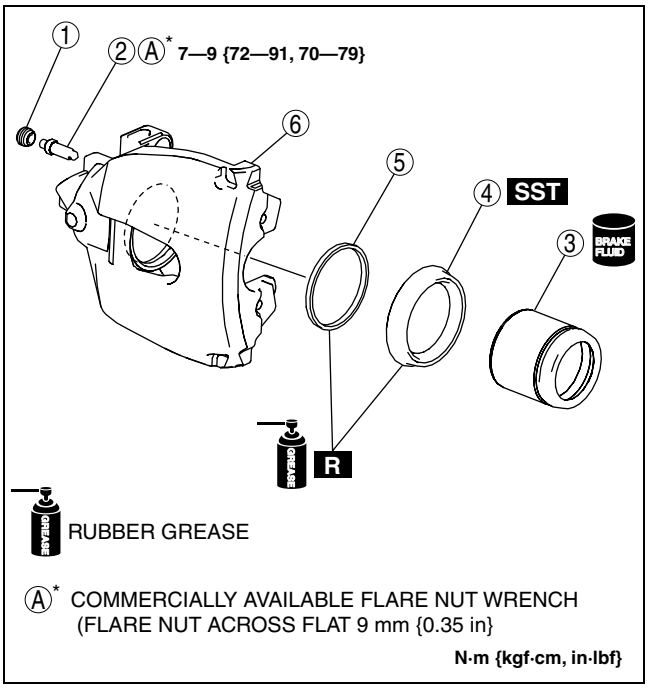

C3U0411W015

Piston Disassembly Note

1. Insert a piece of wood in the caliper as shown in the figure and blow compressed air through the bleeder screw installation hole to remove the piston from the caliper body.

   Caution
   - **The piston could be damaged if blown out with great force. Blow the compressed air slowly to prevent the piston from suddenly popping out.**

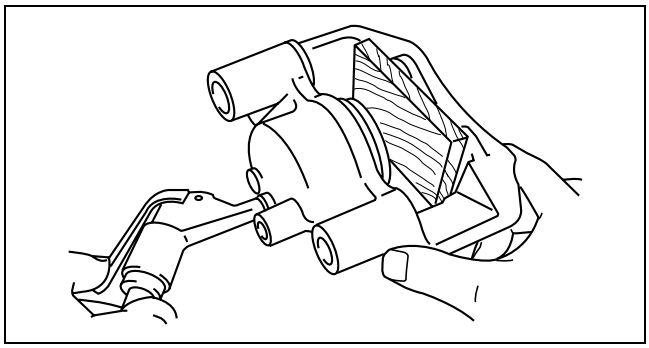

A6E6912W047

Dust Seal Assembly Note

1. Assemble a new dust seal to the caliper using the **SSTs** and a press with a press-in force of **834 N {85 kgf, 187 in·lbf}**.
2. Verify that there is no gap between the dust seal and caliper body.

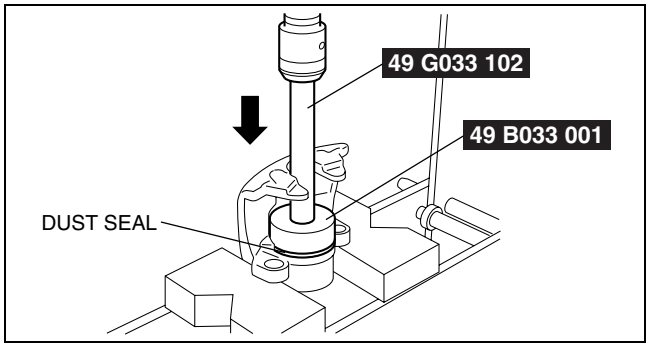

B3E0411W007

Piston Assembly Note

1. Press the piston into the dust seal opening as shown in the figure.

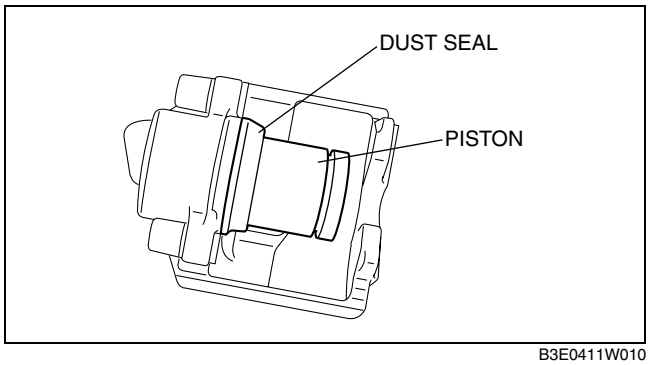

B3E0411W010

2. Insert a piece of wood between the caliper body and the piston, and while supporting the piston by hand, blow compressed air through the brake hose installation hole.

   Warning
   - **When blowing compressed air into the caliper body, the piston may pop out and cause injury if not supported at the correct point. Securely support the piston friction surface by hand when blowing compressed air.**

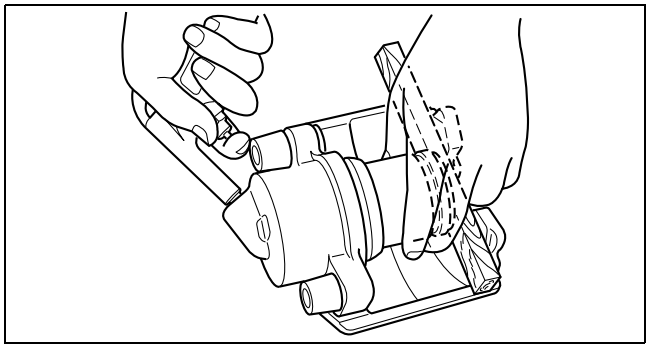

B3E0411W011

Note
- By blowing compressed air, the dust seal expands due to air pressure and covers the piston end.

3. Verify that the dust seal lip covers the piston end as shown in the figure.
4. Press the piston into the caliper body completely.

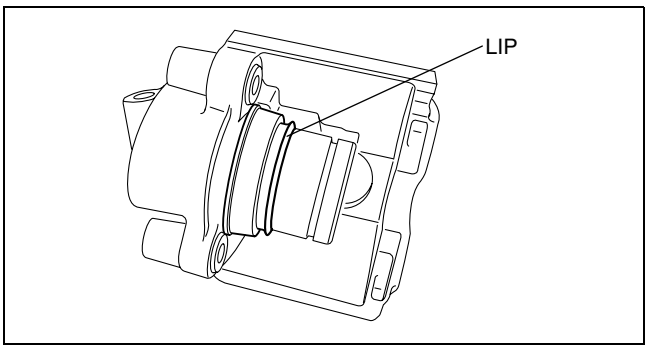

B3E0411W012

REAR BRAKE (DISC) INSPECTION

DPE041126980W01

Brake Judder Repair Hints

Description

1. Brake judder concern has the following 3 characteristics:

Steering wheel vibration

1. The steering wheel vibrates in the rotation direction. This characteristic is most noticeable when applying brakes at a vehicle speed of **100—140 km/h {62.1—86.8 mph}**.

Floor vibration

1. When applying the brakes, the vehicle body shakes back and forth. The seriousness of the shaking is not influenced by vehicle speed.

Brake pedal vibration

1. When applying the brakes, a pulsating force tries to push the brake pad back. The pulsation is transmitted to the brake pedal.
2. The following are the main possible causes of brake judder:

Due to an excessive runout (side-to-side wobble) of the disc plate, the thickness of the disc plate is uneven.

1. If the runout is **more than 0.05 mm {0.002 in}** at the position **10 mm {0.39 in}** from the disc plate edge, uneven wear occurs on the disc plate because the pad contacts the plate unevenly.
2. If the runout is **less than 0.05 mm {0.002 in}**, uneven wear does not occur.

The disc plate is deformed by heat.

1. Repeated panic braking may raise the temperature in some portions of the disc plate by **approx. 1,000 °C {1,832 °F}**. This results in a deformed disc plate.

Due to corrosion, the thickness and friction coefficient of the disc plate change.

1. If the vehicle is parked in damp conditions for a long time, corrosion occurs on the friction surface of the disc plate.
2. The thickness of corrosion is uneven and sometimes appears like a wave pattern, which changes the friction coefficient and causes a reaction force.

Inspection and repair procedure

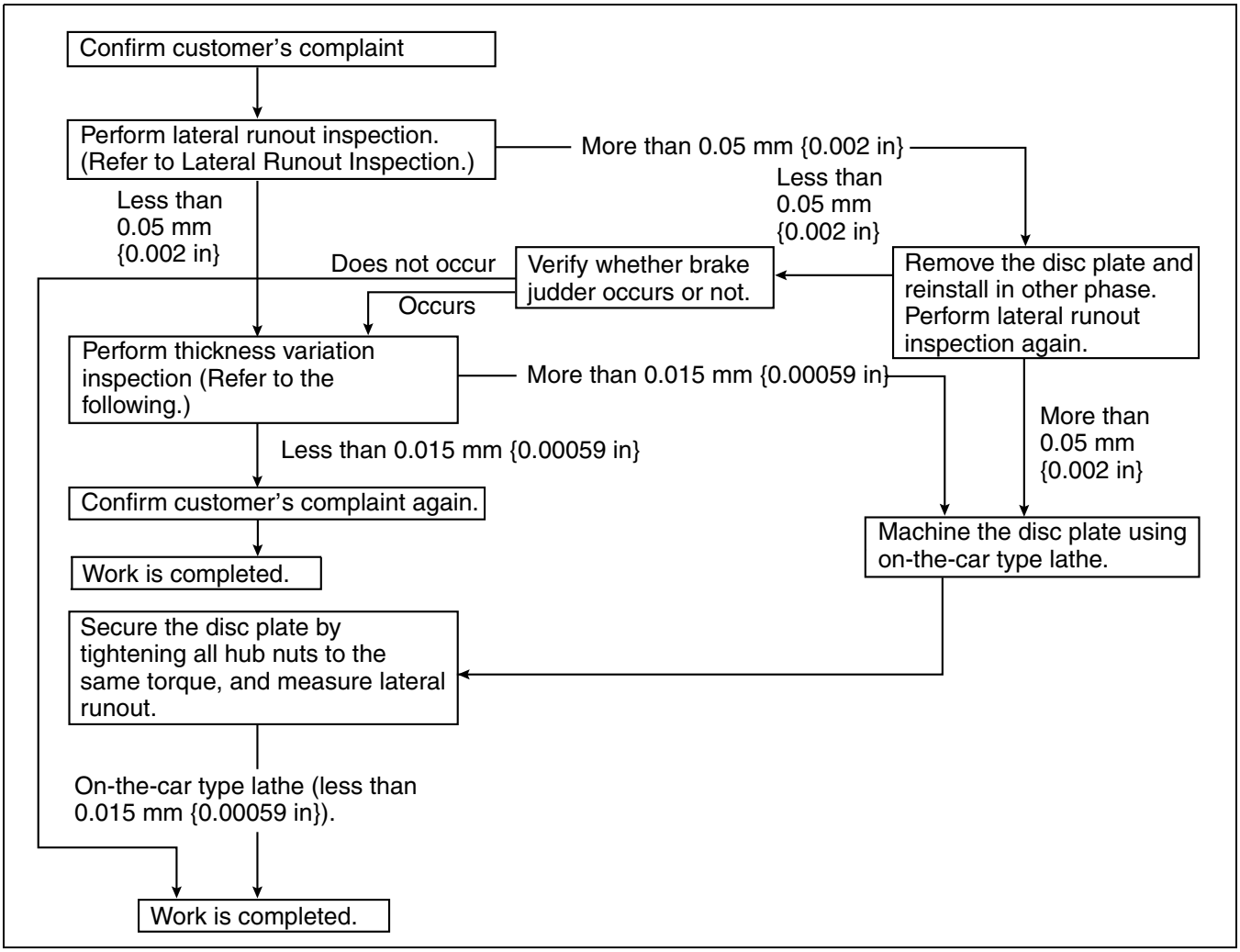

B3E0411W021

Lateral runout inspection

1. To secure the disc plate and the hub, insert the washer (thickness **10 mm {0.39 in}**, inner diameter **more than 12 mm {0.47 in}**) between each hub bolt and the hub nut, then tighten all the hub nuts.

   Note
   - The component parts of the **SST** (49 B017 001 or 49 G019 003) can be used as a suitable washer.

2. After tightening all the hub nuts to the same torque, put the dial gauge on the friction surface of the disc plate **10 mm {0.39 in}** from the disc plate edge.
3. Rotate the disc plate one time and measure the runout.

   Rear disc plate runout limit
   0.05 mm {0.002 in}

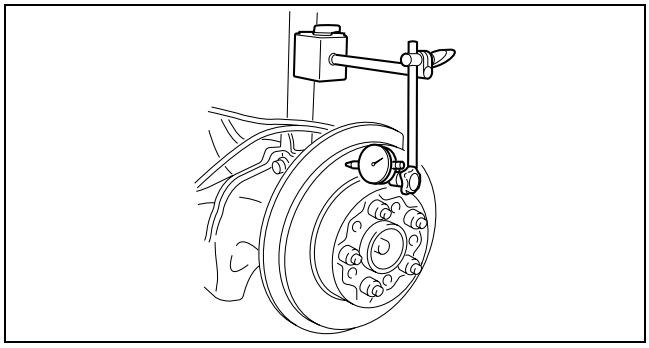

B3E0411W014

Thickness variation inspection

1. Clean the disc plate-to-pad friction surface using a brake cleaner.

2. Measure the points indicated in the illustration using a caliper (micrometer).
3. Subtract the minimum value from the maximum, and if the result is not within the specification, machine the disc plate using a lathe.

Thickness variation limit
0.015 mm {0.00059 in}

Warning
- **Do not exceed minimum disc plate thickness.**

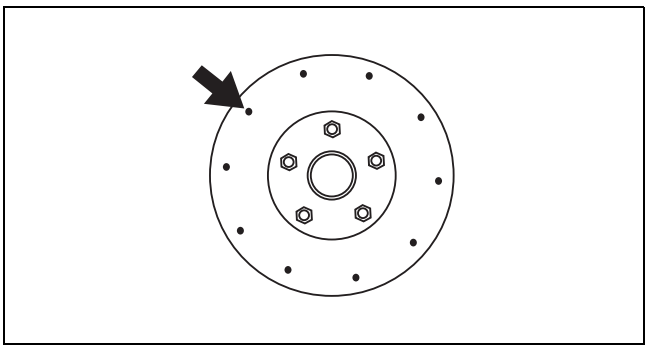

CHU0411W027

Disc Plate Thickness Inspection

Caution
- **Excessive runout may result if the disc plate is removed from the vehicle then machined. Machine the disc plate while installed on the vehicle.**

1. Measure the thickness of the disc plate.
   - If the thickness is not within the specification, replace the disc plate.

Minimum rear disc plate thickness
9 mm {0.35 in}

Minimum rear disc plate thickness after machining using a brake lathe on-vehicle
9.8 mm {0.39 in}

Disc Pad Thickness Inspection
1. Jack up the front of the vehicle and support it with safety stands.
2. Remove the wheels and tires.
3. Verify the remaining thickness of the pads.

Minimum rear disc pad thickness
2.0 mm {0.079 in} min.

4. Replace the pads as a set (right and left wheels) if either one is at or less than the minimum thickness.

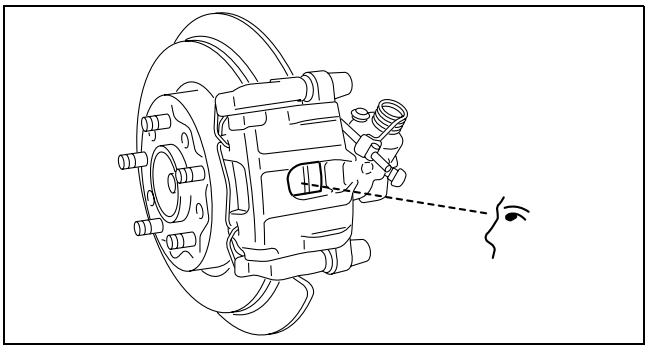

B3E0411W016

REAR BRAKE (DISC) REMOVAL/INSTALLATION

DPE041126980W02

1. Remove in the order indicated in the table.
2. Install in the reverse order of removal.
3. After installation, pump the brake pedal a few times and inspect the following:
   — Parking brake lever stroke
   — Brake drag

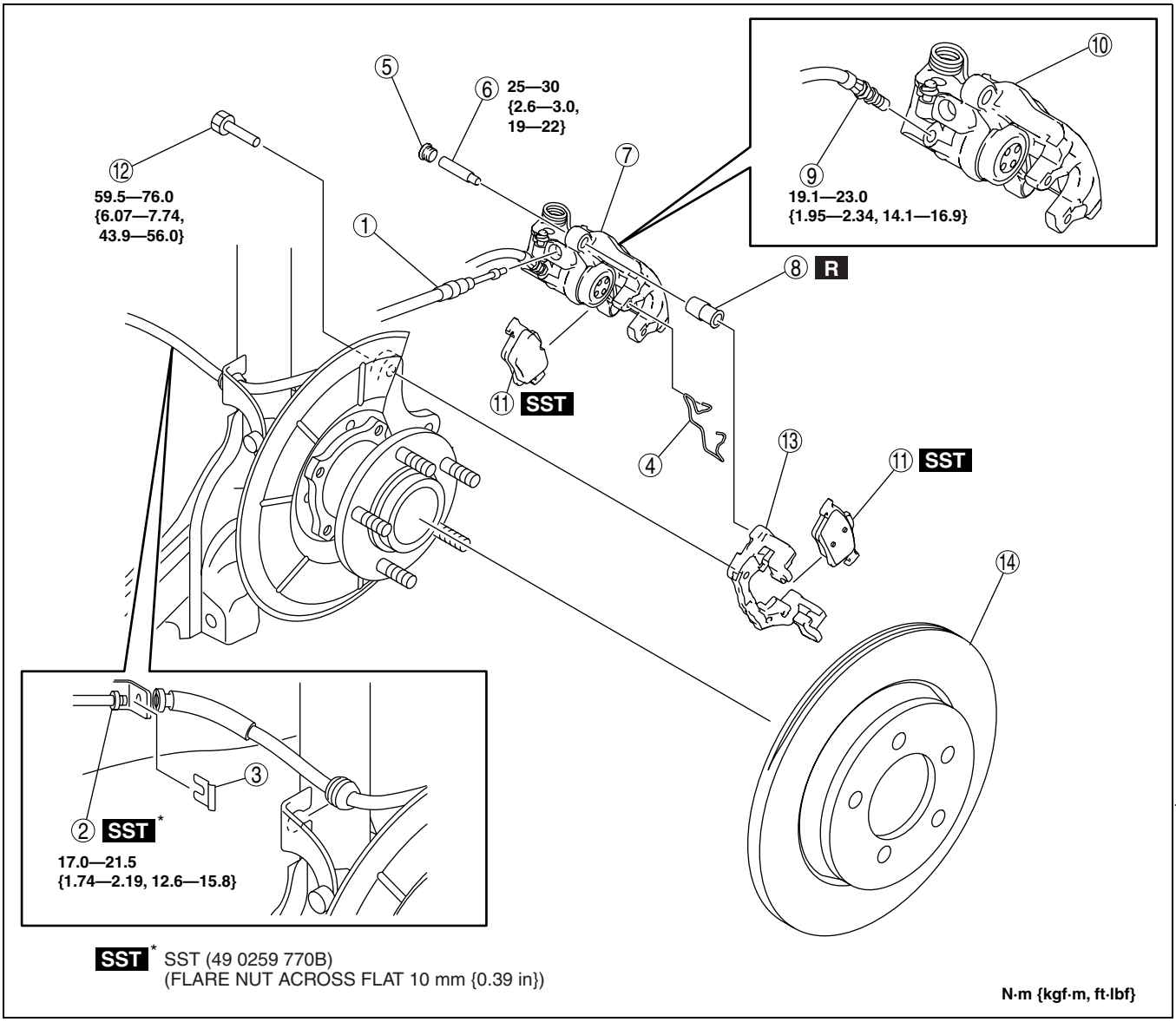

DPE411ZW1025

1	Rear parking brake cable (See 04–12–4 Rear Parking Brake Cable Installation Note.)
2	Brake pipe
3	Clip
4	Retaining clip (See 04–11–21 Retaining Clip Installation Note.)
5	Cap
6	Bolt
7	Caliper, brake hose
8	Boot
9	Brake hose
10	Caliper
11	Disc pad (See 04–11–27 Disc Pad Removal Note.) (See 04–11–28 Disc Pad Installation Note.)
12	Bolt
13	Mounting support
14	Disc plate

Disc Pad Removal Note

1. Remove the disc pad (outer side) from the mounting support.

2. Pull the disc pad (inner side) in the direction of the arrow to remove it from the caliper as shown in the figure.

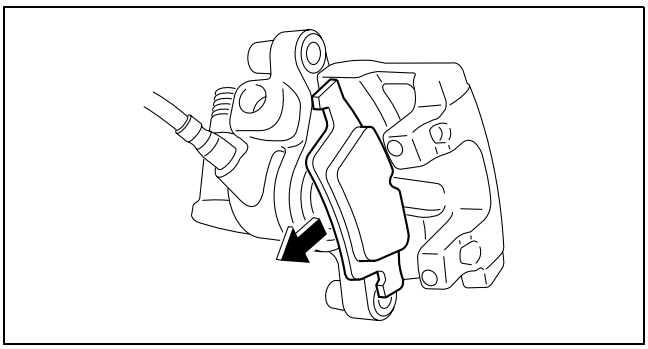

B3E0411W017

Disc Pad Installation Note

1. Install the disc pad (outer side) to the mounting support.
2. Clean the exposed area of the piston.
3. Slowly rotate the piston clockwise while firmly pushing it to the caliper body using the **SST** and push the piston completely into the caliper body.

   Warning
   - **If the SST comes off the piston, it may cause other parts to crush against your hand causing injury. Be careful that the SST remains firmly connected to the piston when you push the piston into the caliper body.**

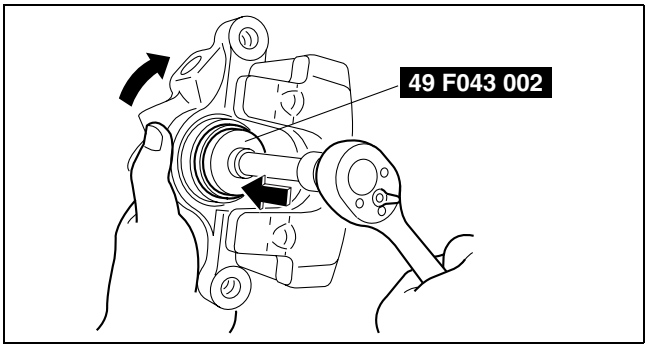

D3U411ZW6999

4. Align the disc pad (inner side) spring into the piston groove, and insert it in the direction of the arrow.
5. Install the disc pad (inner side) to the caliper.

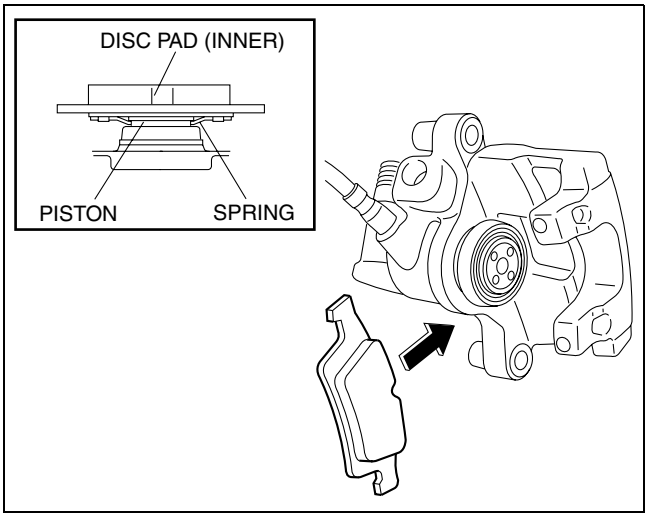

B3E0411W018

DISC PAD (REAR) REPLACEMENT

DPE041126630W01

1. Remove in the order indicated in the table.
2. Install in the reverse order of removal.
3. After installation, pump the brake pedal a few times and inspect the following:
   — Parking brake lever stroke
   — Brake drag

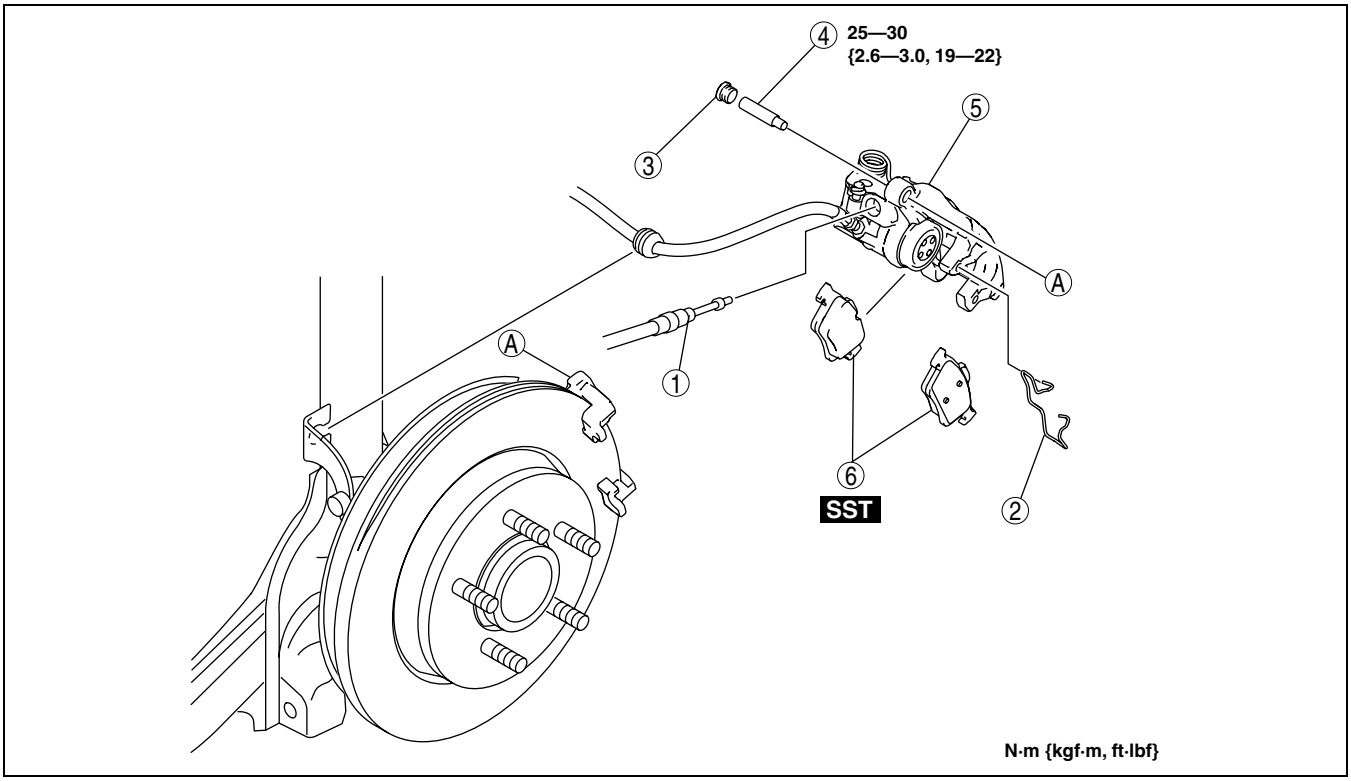

B3E0411W047

1	Rear parking brake cable (See 04–12–4 Rear Parking Brake Cable Installation Note.)
2	Retaining clip (See 04–11–21 Retaining Clip Installation Note.)
3	Cap

4	Bolt
5	Caliper
6	Disc pad (See 04–11–27 Disc Pad Removal Note.) (See 04–11–28 Disc Pad Installation Note.)

CALIPER (REAR) DISASSEMBLY/ASSEMBLY

1. Disassemble in the order indicated in the table.

1	Dust seal (See 04–11–30 Dust Seal Assembly Note.)
2	Bleeder cap
3	Bleeder screw
4	Caliper body

2. Assemble in the reverse order of disassembly.

DPE041126990W01

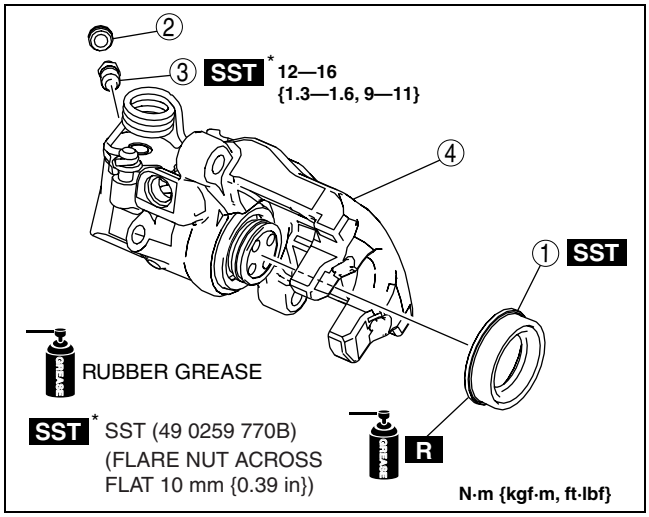

B3E0411W048

Dust Seal Assembly Note

1. While rotating the piston counterclockwise using the **SST**, pull it out to the position shown in the figure.

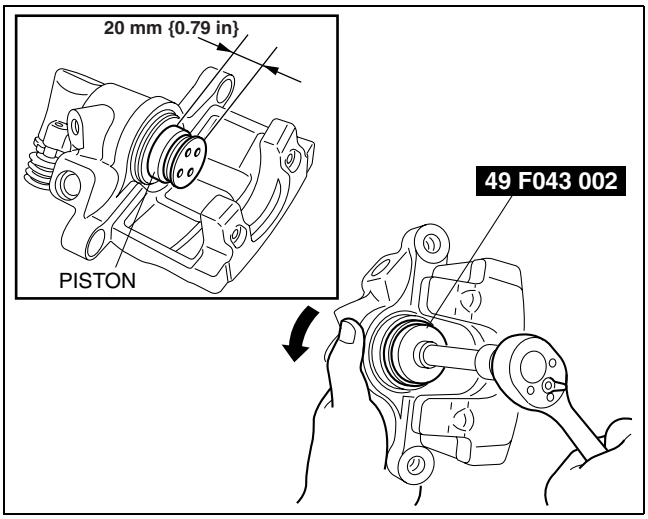

B3E0411W035

2. As shown in the figure, assemble a new dust seal to the piston and slowly rotate the piston clockwise while pushing it to the caliper body using **SST** to push the piston completely into the caliper body.

   Warning
   - **If the SST comes off the piston, it may cause other parts to crush against your hand causing injury. Be careful that the SST remains firmly connected to the piston when you push the piston into the caliper body.**

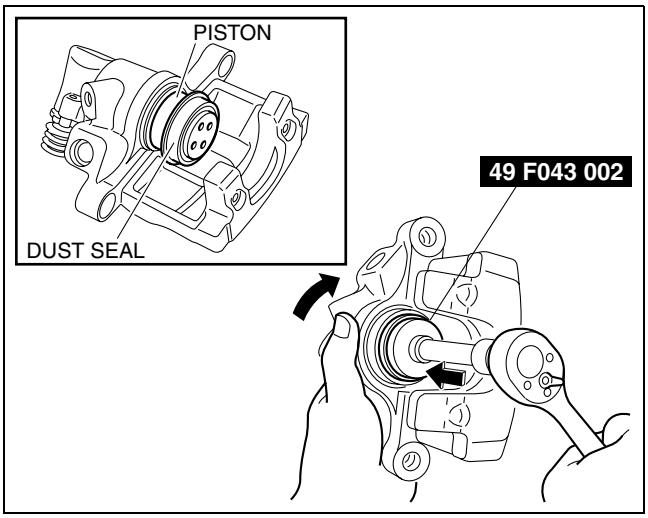

D3U411ZW6998

3. Assemble the dust seal to the caliper body using the **SSTs** and a press with a press-in force of **834 N {85 kgf, 187 in·lbf}**
4. Verify that there is no gap between the dust seal and caliper body.

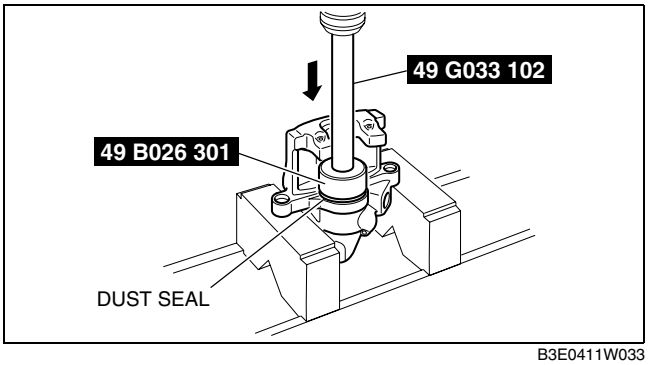

B3E0411W033

04–12 PARKING BRAKE SYSTEM

PARKING BRAKE SYSTEM LOCATION INDEX 04–12–1
PARKING BRAKE LEVER INSPECTION 04–12–1
PARKING BRAKE LEVER ADJUSTMENT 04–12–2
PARKING BRAKE LEVER REMOVAL/ INSTALLATION. 04–12–2
PARKING BRAKE SWITCH INSPECTION 04–12–4

PARKING BRAKE SYSTEM LOCATION INDEX

DPE041200000W01

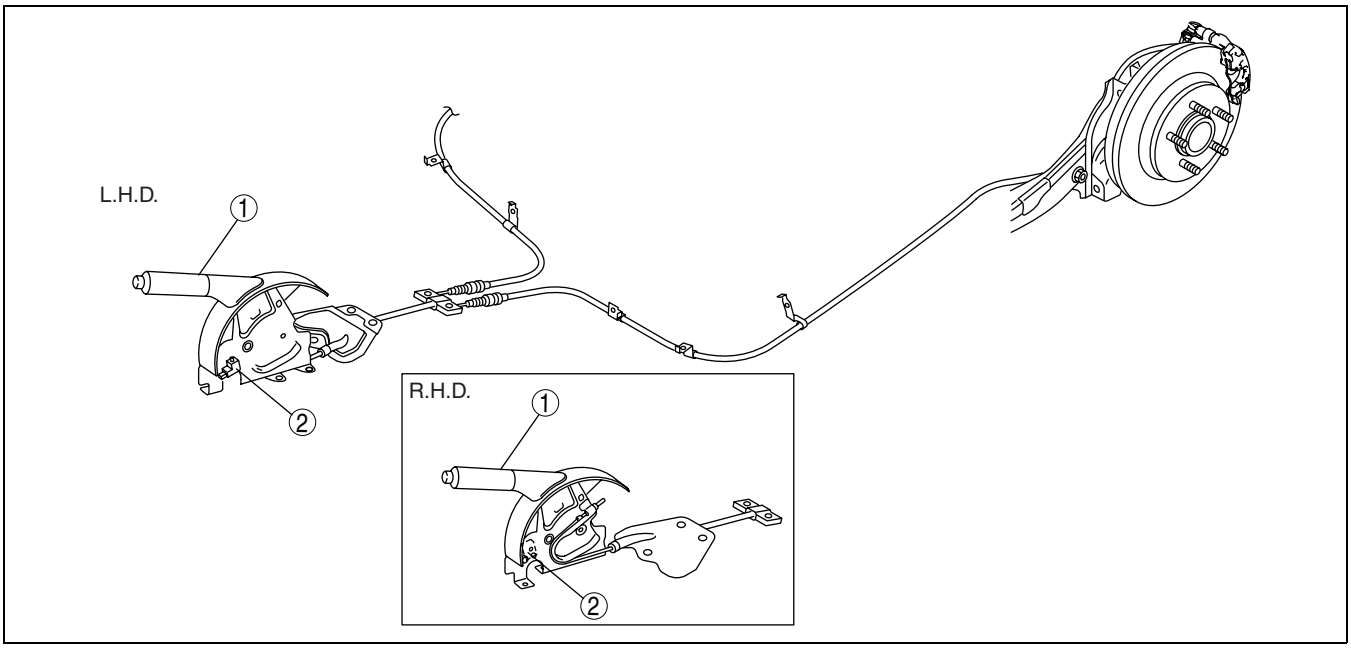

DPE412ZW1001

1	Parking brake lever (See 04–12–1 PARKING BRAKE LEVER INSPECTION.) (See 04–12–2 PARKING BRAKE LEVER ADJUSTMENT.) (See 04–12–2 PARKING BRAKE LEVER REMOVAL/INSTALLATION.)
2	Parking brake switch (See 04–12–4 PARKING BRAKE SWITCH INSPECTION.)

PARKING BRAKE LEVER INSPECTION

DPE041244300W01

Stroke Inspection

1. Pump the brake pedal a few times.
2. Pull the parking brake lever two to three times.
3. Inspect the parking brake stroke by slowly pulling at point A **50 mm {1.97 in}** from the end of the parking brake lever with a force of **98 N {10 kgf, 22 lbf}** and counting the number of notches (clicking sound).
   - If not within the specification, adjust the parking brake lever.

   Parking brake lever stroke when pulled at 98 N {10 kgf, 22 lbf}
   3—6 notches

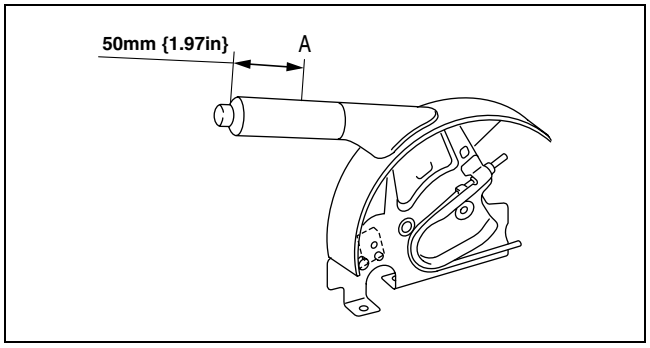

DPE412ZW1002

PARKING BRAKE LEVER ADJUSTMENT

DPE041244300W02

1. Pump the brake pedal a few times.
2. Remove the service hole cover of the center console.
3. Turn the adjusting nut and adjust the parking brake lever.
4. After adjustment, pull the parking brake lever one notch and verify that the parking brake warning light illuminates.
5. Verify that the rear brakes do not drag.

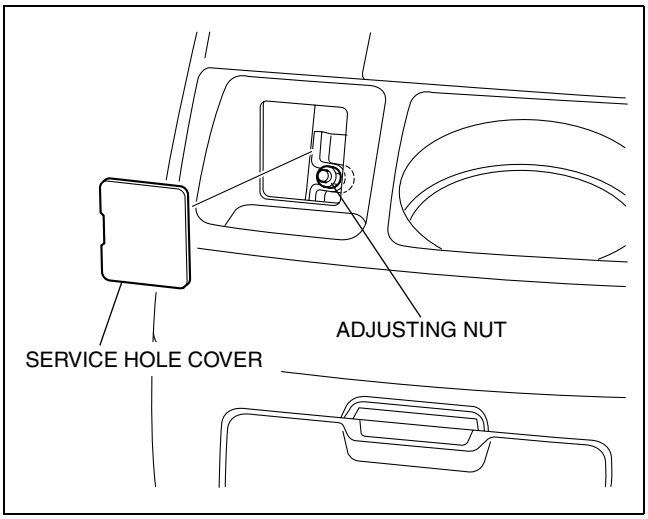

DPE412ZW1003

PARKING BRAKE LEVER REMOVAL/INSTALLATION

DPE041244300W03

1. Remove the main silencer. (L8, LF) (See 01–15A–1 EXHAUST SYSTEM REMOVAL/INSTALLATION [L8, LF].)
2. Remove the middle pipe. (See 01–15B–1 EXHAUST SYSTEM REMOVAL/INSTALLATION [MZR-CD (RF Turbo)].)
3. Remove the heat insulator.
4. Remove the under cover (rear).
5. Remove the second-row seat. (See 09–13–5 SECOND-ROW SEAT REMOVAL/INSTALLATION.)
6. Remove the front seat. (See 09–13–1 FRONT SEAT REMOVAL/INSTALLATION.)
7. Remove the center console. (See 09–17–14 CENTER CONSOLE REMOVAL/INSTALLATION.)
8. Remove the front scuff plate. (See 09–17–19 FRONT SCUFF PLATE REMOVAL/INSTALLATION.)
9. Remove the front side trim. (See 09–17–15 FRONT SIDE TRIM REMOVAL/INSTALLATION.)
10. Remove the rear scuff plate. (See 09–17–19 REAR SCUFF PLATE REMOVAL/INSTALLATION.)
11. Remove the B-pillar lower trim. (See 09–17–16 B-PILLAR LOWER TRIM REMOVAL/INSTALLATION.)
12. Remove in the order indicated in the table.
13. Install in the reverse order of removal.
14. After installation, inspect the parking brake lever stroke. (See 04–12–1 PARKING BRAKE LEVER INSPECTION.)

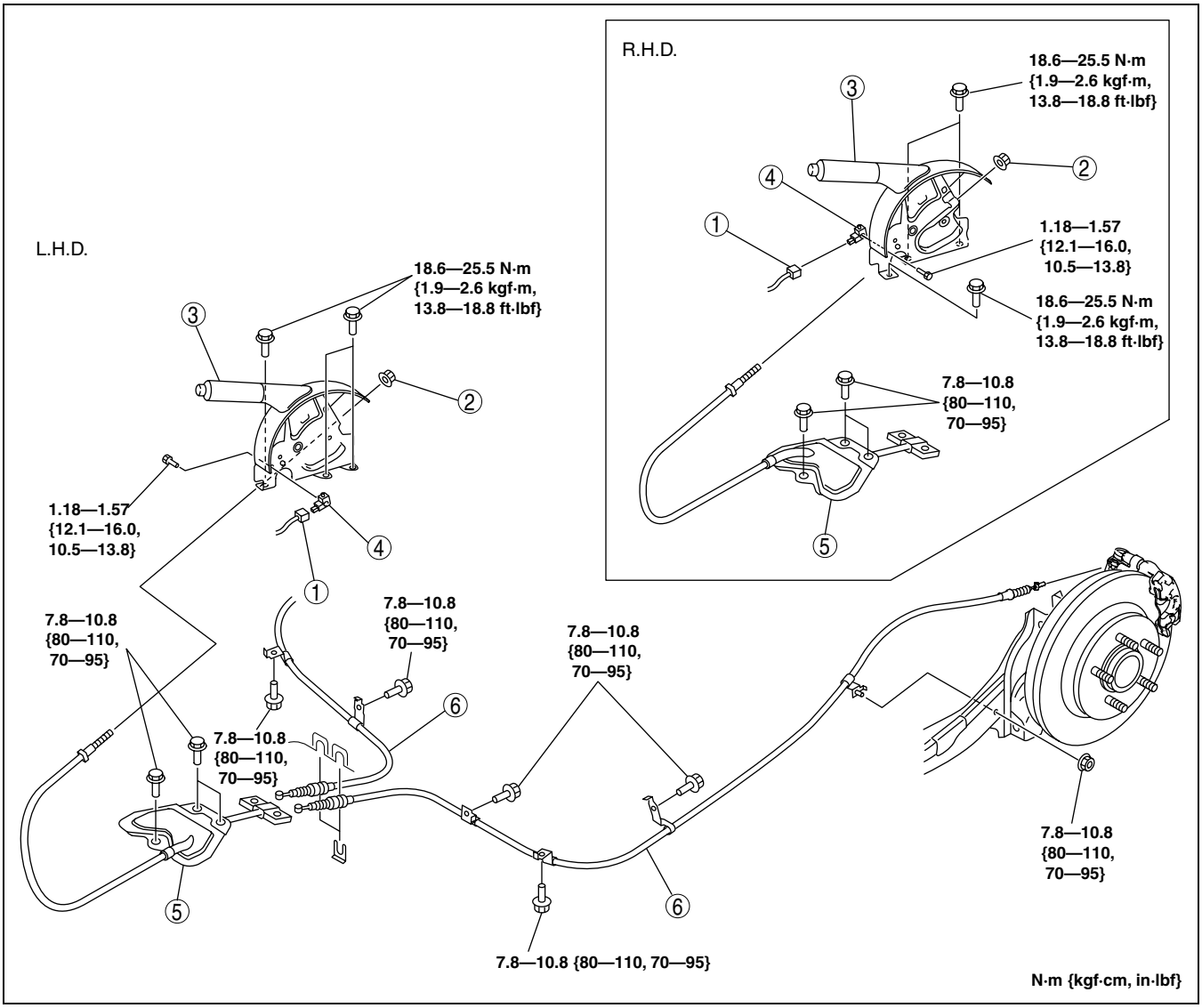

DPE412ZW1004

1	Parking brake switch
2	Adjusting nut
3	Parking brake lever
4	Parking brake switch

5	Front parking brake cable (See 04–12–3 Front Parking Brake Cable Removal Note.)
6	Rear parking brake cable (See 04–12–4 Rear Parking Brake Cable Installation Note.)

Front Parking Brake Cable Removal Note

1. Lift the floor covering around the parking brake lever installation area.
2. Remove the front parking brake cable installation bolts through the parking brake lever installation hole of the floor covering.
3. Remove the front parking brake cable through the parking brake lever installation hole of the floor covering.

Rear Parking Brake Cable Installation Note

1. Pass the rear parking brake cable inside the rear ABS wheel-speed sensor wiring harness as shown in the figure.
2. Install the rear parking brake cable.

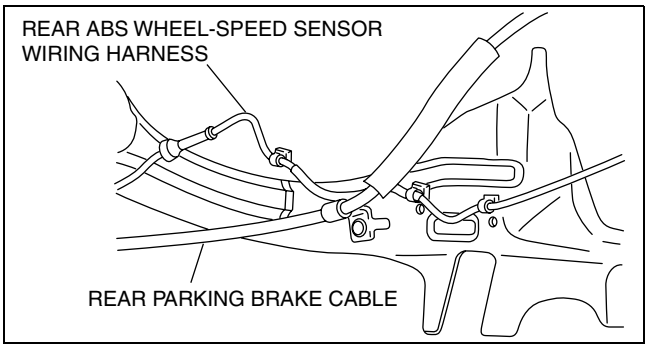

DPE412ZW1005

3. Verify that the end of the rear parking brake cable outer end is out of the caliper as shown in the figure.

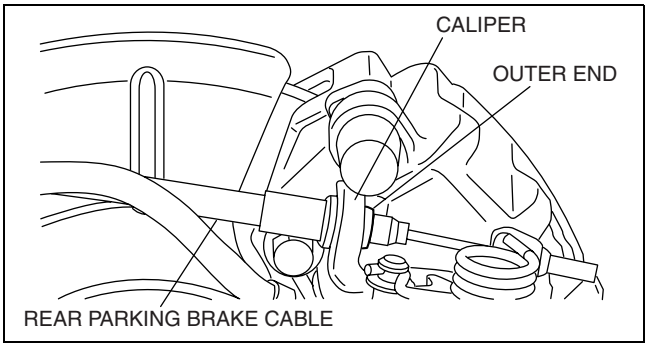

DPE412ZW1006

PARKING BRAKE SWITCH INSPECTION

DPE041266450W01

1. Disconnect the parking brake switch connector.
2. Verify that the continuity is as indicated in the table.

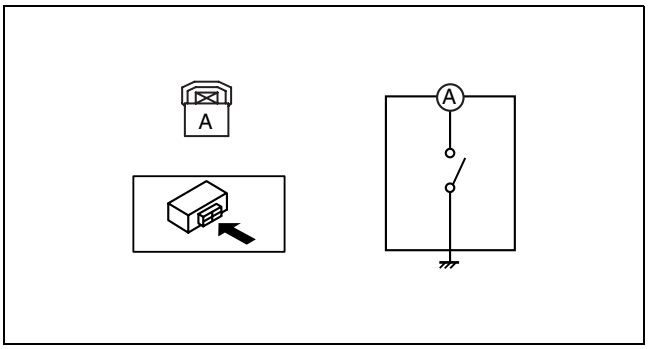

CPJ412ZWB007

- If not as indicated in the table, replace the parking brake switch.

○—○: Continuity

Condition	Terminal	
	A	Body ground
Parking brake lever pulled	○	○
Parking brake lever released		

CHU0412W003

04–13 ANTILOCK BRAKE SYSTEM

ABS LOCATION INDEX 04–13–1
ABS SYSTEM INSPECTION. 04–13–2
ABS HU/CM REMOVAL/ INSTALLATION 04–13–2
ABS HU/CM INSPECTION 04–13–4
FRONT ABS WHEEL-SPEED SENSOR REMOVAL/ INSTALLATION 04–13–6
FRONT ABS WHEEL-SPEED SENSOR INSPECTION 04–13–6
REAR ABS WHEEL-SPEED SENSOR REMOVAL/ INSTALLATION. 04–13–7
REAR ABS WHEEL-SPEED SENSOR INSPECTION 04–13–8

ABS LOCATION INDEX

DPE041300000W01

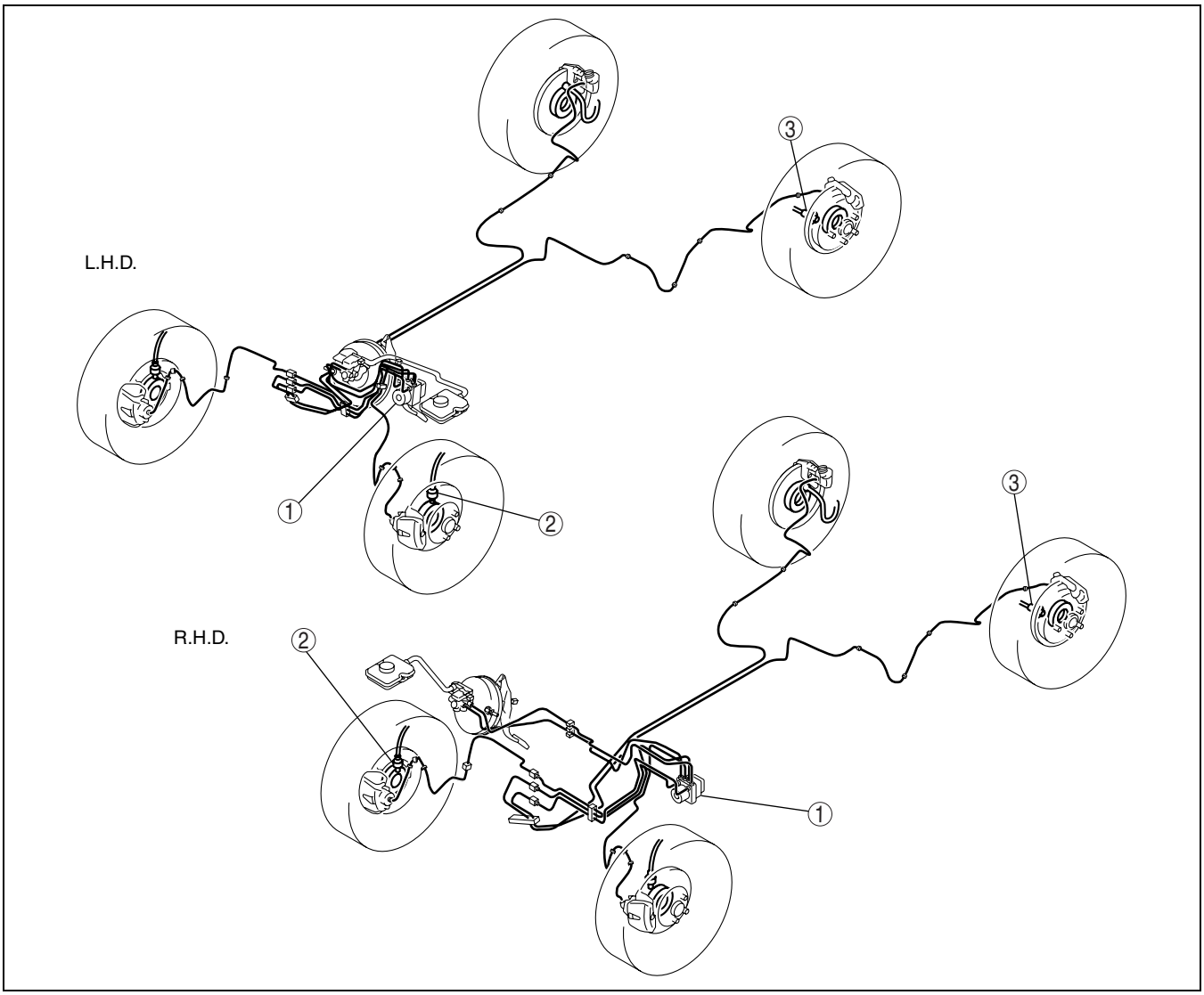

DPE413ZW1001

1	ABS HU/CM (See 04–13–2 ABS SYSTEM INSPECTION.) (See 04–13–2 ABS HU/CM REMOVAL/ INSTALLATION.) (See 04–13–4 ABS HU/CM INSPECTION.)
2	Front ABS wheel-speed sensor (See 04–13–6 FRONT ABS WHEEL-SPEED SENSOR REMOVAL/INSTALLATION.) (See 04–13–6 FRONT ABS WHEEL-SPEED SENSOR INSPECTION.)
3	Rear ABS wheel-speed sensor (See 04–13–7 REAR ABS WHEEL-SPEED SENSOR REMOVAL/INSTALLATION.) (See 04–13–8 REAR ABS WHEEL-SPEED SENSOR INSPECTION.)

ABS SYSTEM INSPECTION

DPE041300000W02

ABS Hydraulic Unit On-vehicle Inspection

Preparation

1. Verify that the battery is fully charged.
2. Turn the ignition switch to the ON position and verify that the ABS warning light goes out after **approx. 3.0 s**.
3. Turn the ignition switch off.
4. Jack up the vehicle and support it evenly on safety stands.
5. Shift to neutral.
6. Release the parking brake.
7. Verify that all four wheels rotate.
8. Rotate the inspected wheels by hand and verify there is no brake drag.
   - If there is any brake drag, perform regular brake inspection.
   - If there is no brake drag, perform ABS HU/CM operation inspection.

Operation inspection

1. Perform “Preparation”.
2. Connect the WDS or equivalent to the DLC-2.
3. Set up an active command mode inspection according to the combination of commands below.

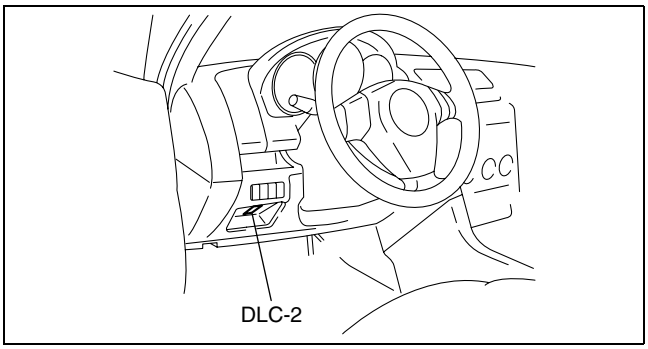

DPE402AW1005

Operation condition	Command name			Command transmission type
	PMP_MOTOR	RF_OUTLET	RF_INLET	
Brake pressure retention	OFF	OFF	ON	Manual
Brake pressure reduction	ON	ON	ON	

The chart above shows an example of a right front wheel inspection.

Caution

- **When operating the solenoid valve and pump motor using the active command mode, make sure to keep the operation time within 2 s to prevent damaging the ABS HU/CM.**

Note

- When working with two people, one should press on the brake pedal, the other should attempt to rotate the wheel being inspected.

4. Send the command while depressing on the brake pedal and attempting to rotate the wheel being inspected.
5. Performing the inspection above determines the following:
   - The ABS HU/CM brake lines are normal.
   - The ABS HU/CM hydraulic system is not significantly abnormal (including inside ABS HU/CM).
   - The ABS HU/CM internal electrical parts (solenoid, motor and other parts) are normal.
   - The ABS HU/CM output system wiring harnesses (solenoid valve, relay system) are normal.
     — However, the following items cannot be verified.
       - Malfunction of ABS HU/CM input system wiring harnesses and parts
       - Extremely small leakage in the ABS HU/CM internal hydraulic system
       - Intermittent malfunction of the above items

ABS HU/CM REMOVAL/INSTALLATION

DPE041343750W01

Caution

- **Do not separate the ABS HU and ABS CM unless replacing them, otherwise the ABS HU/CM may not function properly. When replacing them with new ones, always perform procedures according to the instructions included with the new parts.**
- **The internal parts of the ABS HU/CM could be damaged if dropped. Be careful not to drop the ABS HU/CM. Replace the ABS HU/CM if it is subjected to an impact.**

1. Remove the battery and battery tray. (See 01–17B–1 BATTERY REMOVAL/INSTALLATION [MZR-CD (RF Turbo)].) (See 01–17A–1 BATTERY REMOVAL/INSTALLATION [L8, LF].)
2. For L.H.D., remove the reserve hose (MTX vehicles). (See 04–11–10 Reserve Hose (MTX) Removal Note.) (See 05–10–6 Clutch Pipe and Clutch Reserve Hose Removal Note.) (See 04–11–10 Reserve Hose (MTX) Installation Note.) (See 05–10–7 Clutch Pipe and Clutch Reserve Hose Installation Note.)
3. For L.H.D., remove the reserve tank hose. (See 04–11–9 MASTER CYLINDER REMOVAL/INSTALLATION [L.H.D.].)
4. Remove in the order indicated in the table.
5. Install in the reverse order of removal.

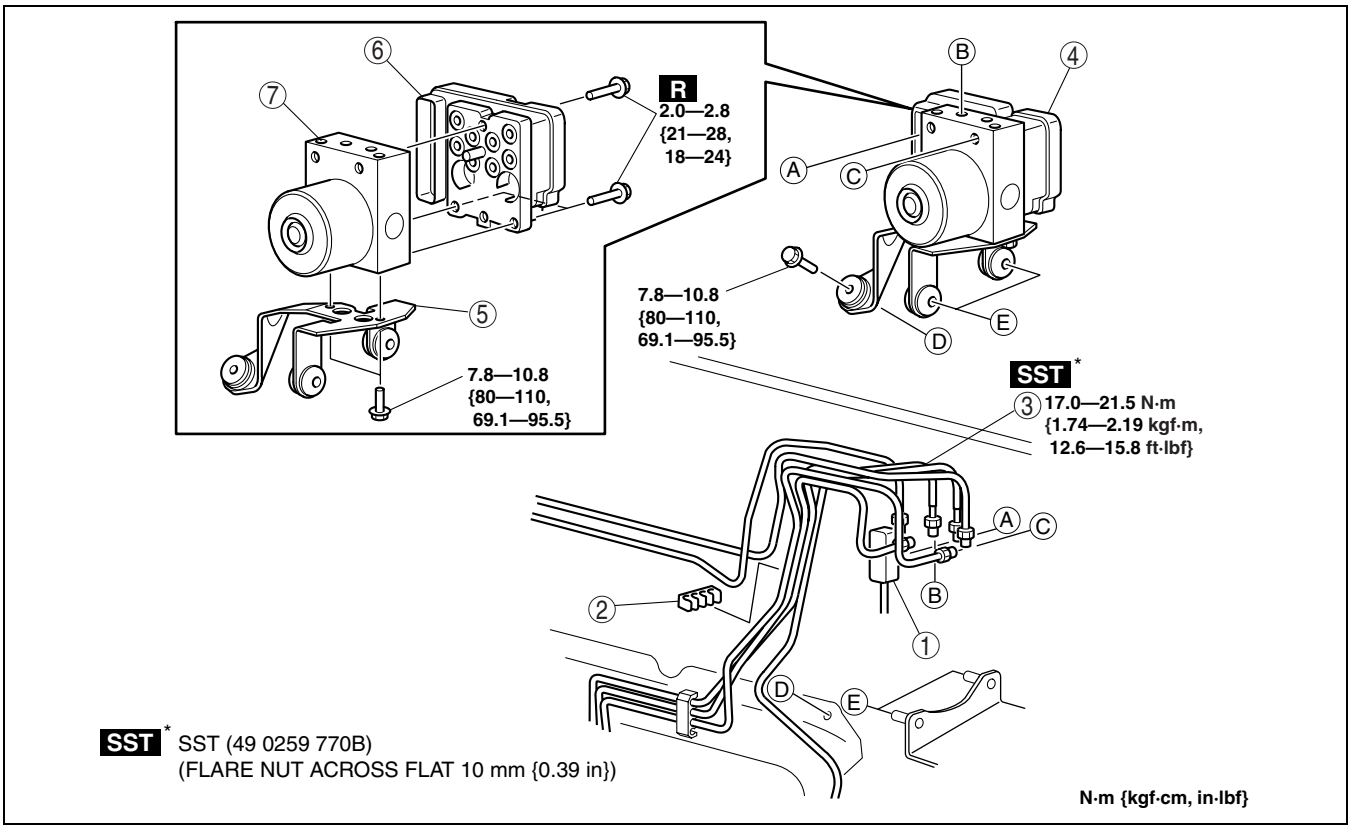

DPE413ZW1002

1	Connector (See 04–13–3 Connector Removal Note.) (See 04–13–4 Connector Installation Note.)
2	Brake pipe holder
3	Brake pipe (See 04–13–4 Brake Pipe Removal Note.) (See 04–13–4 Brake Pipe Installation Note.)
4	ABS HU/CM component, bracket (See 04–13–4 ABS HU/CM Component, Bracket Removal Note.)
5	Bracket
6	ABS CM
7	ABS HU

Connector Removal Note

1. Pull the connector cover up in the direction of the arrow while pressing the tab of the connector cover.
2. Pull the connector toward the vehicle front and remove it.

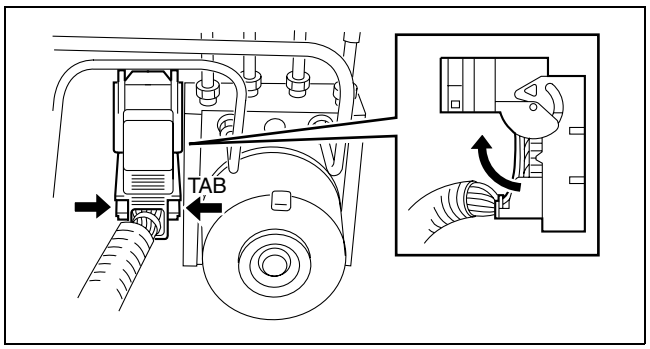

B3E0413W003

Brake Pipe Removal Note

1. Place an alignment mark on the brake pipe and ABS HU/CM.
2. Apply protective tape to the connector to prevent brake fluid from entering.
3. Remove the brake pipe.

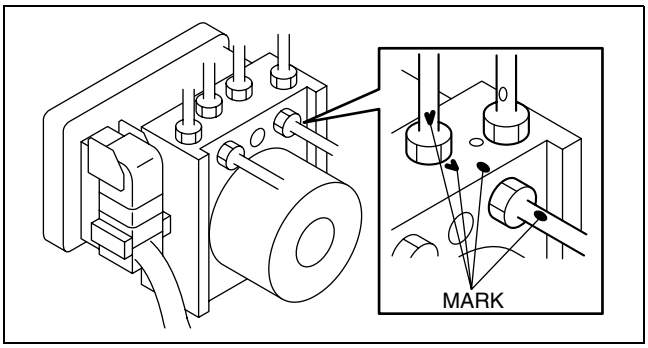

DPE413ZW1003

ABS HU/CM Component, Bracket Removal Note

1. As shown in the figure, move the bracket in the direction of the arrow and remove the ABS HU/CM component and bracket from the body.

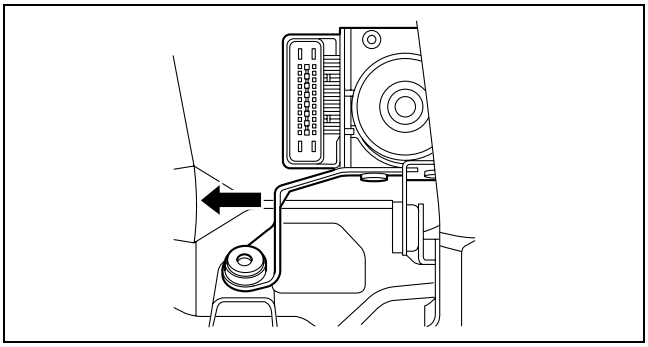

B3E0413W004

Brake Pipe Installation Note

1. Align the marks made before removal and install the brake pipe to the ABS HU/CM referring to the figure.

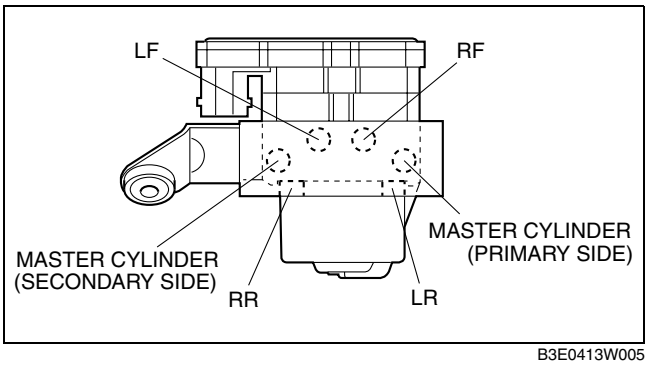

B3E0413W005

Connector Installation Note

1. After connecting the connector, verify that the connector cover is completely pushed in.

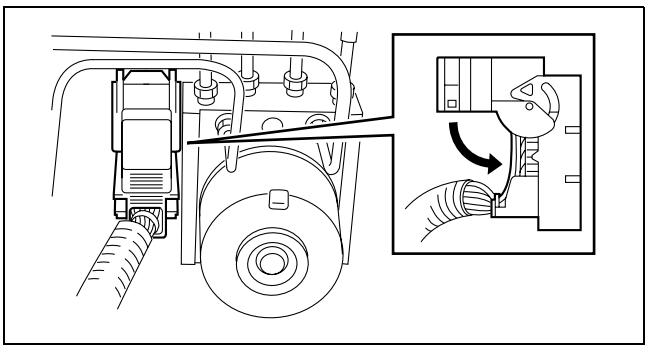

B3E0413W013

ABS HU/CM INSPECTION

DPE041343750W02

1. Disconnect the ABS HU/CM connector.
2. Connect the negative battery cable.
3. Attach the tester lead to the ABS HU/CM wiring harness-side connector, then inspect the voltage, continuity, or resistance according to the standard (reference) on the table.

Terminal Voltage Table (Reference)

ABS HU/CM WIRING HARNESS-SIDE CONNECTOR

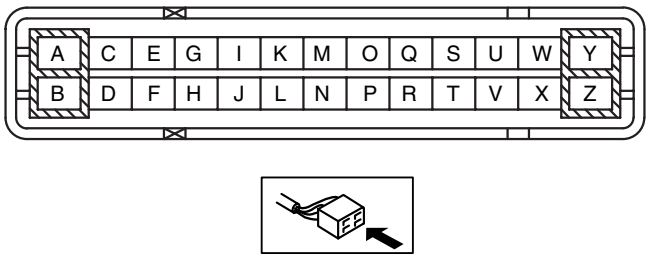

B3E0413W010

Terminal	Signal name	Connected to	Measured item	Measured terminal (measurement condition)	Standard	Inspection item(s)
A	—	—	—	—	—	—
B	Ground (ABS motor)	Ground point	Continuity	B—ground point	Continuity detected	• Wiring harness (B—ground point)
C	RR wheel-speed (ground)	RR ABS wheel-speed sensor	Continuity	C—RR ABS wheel-speed sensor terminal B	Continuity detected	• Wiring harness (C—RR ABS wheel-speed sensor terminal B)
D	—	—	—	—	—	—
E	RR wheel-speed (signal)	RR ABS wheel-speed sensor	Continuity	E—RR ABS wheel-speed sensor terminal A	Continuity detected	• Wiring harness (E—RR ABS wheel-speed sensor terminal A)
F	—	—	—	—	—	—
G	—	—	—	—	—	—
H	CAN_H	DLC-2 (CAN_H)	Continuity	H—DLC-2 terminal CAN_H	Continuity detected	• Wiring harness (H—DLC-2 terminal CAN_H)
I	LF wheel-speed (signal)	LF ABS wheel-speed sensor	Continuity	I—LF ABS wheel-speed sensor terminal A	Continuity detected	• Wiring harness (I—LF ABS wheel-speed sensor terminal A)
J	—	—	—	—	—	—
K	LF wheel-speed (ground)	LF ABS wheel-speed sensor	Continuity	K—LF ABS wheel-speed sensor terminal B	Continuity detected	• Wiring harness (K—LF ABS wheel-speed sensor terminal B)
L	CAN_L	DLC-2 (CAN_H)	Continuity	L—DLC-2 terminal CAN_L	Continuity detected	• Wiring harness (L—DLC-2 terminal CAN_L)
M	—	—	—	—	—	—
N	Power supply (system)	Ignition switch	Voltage	The ignition switch is at the ON position.	B+	• Wiring harness (N—ignition switch)
				The ignition switch is off.	1 V or less	—
O	RF wheel-speed (ground)	RF ABS wheel-speed sensor	Continuity	O—RF ABS wheel-speed sensor terminal B	Continuity detected	• Wiring harness (O—RF ABS wheel-speed sensor terminal B)
P	—	—	—	—	—	—
Q	RF wheel-speed (signal)	RF ABS wheel-speed sensor	Continuity	Q—RF ABS wheel-speed sensor terminal A	Continuity detected	• Wiring harness (Q—RF ABS wheel-speed sensor terminal A)
R	—	—	—	—	—	—
S	—	—	—	—	—	—
T	—	—	—	—	—	—
U	LR wheel-speed (signal)	LR ABS wheel-speed sensor	Continuity	U—LR ABS wheel-speed sensor terminal A	Continuity detected	• Wiring harness (U—LR ABS wheel-speed sensor terminal A)
V	—	—	—	—	—	—
W	LR wheel-speed (ground)	LR ABS wheel-speed sensor	Continuity	U—LR ABS wheel-speed sensor terminal B	Continuity detected	• Wiring harness (U—LR ABS wheel-speed sensor terminal B)
X	—	—	—	—	—	—

Terminal	Signal name	Connected to	Measured item	Measured terminal (measurement condition)	Standard	Inspection item(s)
Y	Power supply (solenoid operation)	Battery	Voltage	Under any condition	B+	• Wiring harness (Y—battery)
Z	Power supply (ABS motor operation)	Battery	Voltage	Under any condition	B+	• Wiring harness (Z—battery)

FRONT ABS WHEEL-SPEED SENSOR REMOVAL/INSTALLATION

DPE041343720W01

1. Remove the mudguard.
2. Remove in the order indicated in the table.

1	Connector
2	Front ABS wheel-speed sensor
3	Front ABS wheel-speed sensor wiring harness

3. Install in the reverse order of removal.

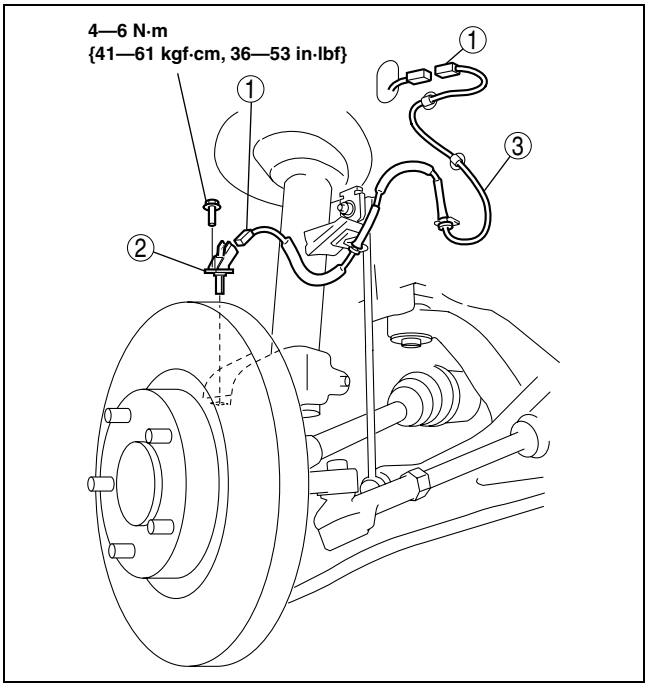

DPE413ZW1004

FRONT ABS WHEEL-SPEED SENSOR INSPECTION

DPE041343720W02

Installation Visual Inspection

1. Inspect for the following:
   - If there is any malfunction, replace the part.
   (1) Excessive play of the ABS wheel-speed sensor
   (2) Deformation of the ABS wheel-speed sensor
   (3) Deformation or damage of the ABS sensor rotor

Clearance Inspection

1. Inspect the clearance between the front ABS wheel-speed sensor and the ABS sensor rotor.
   - If there is any malfunction, verify improper installation and replace if necessary.

   Clearance
   2.1 mm {0.082 in} or less

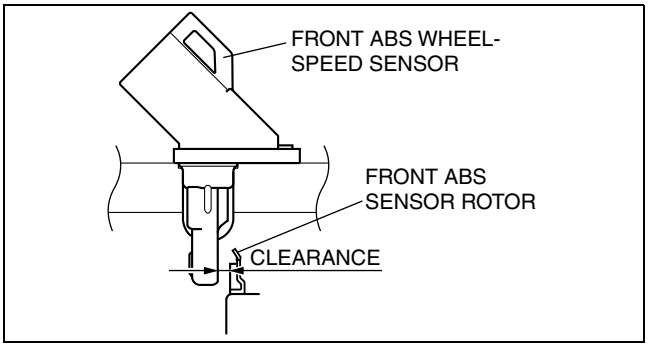

B3E0413W007

Sensor Output Value Inspection

Caution
- **Resistance inspection using other testers may cause damage to the ABS wheel-speed sensor**

internal circuit. Be sure to use the WDS or equivalent to inspect the ABS wheel-speed sensor.

1. Turn the ignition switch off.
2. Connect the WDS or equivalent to the DLC-2.
3. Select the following PIDs using the WDS or equivalent:
   - LF_WSPD
     (LF wheel-speed sensor)
   - RF_WSPD
     (RF wheel-speed sensor)
4. Start the engine and drive the vehicle.
5. Verify that the display of the WDS or equivalent shows the same value as the speedometer.
   - If there is any malfunction, replace the front ABS wheel-speed sensor.

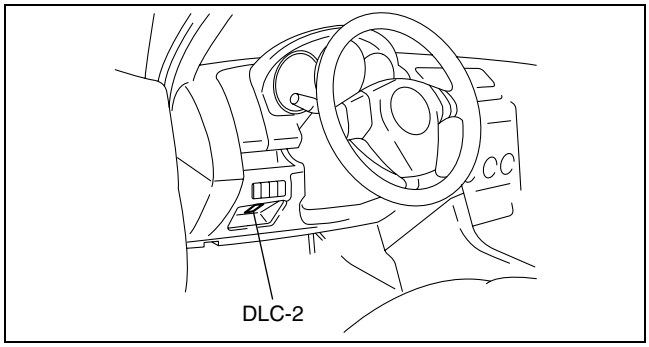

DPE402AW1005

REAR ABS WHEEL-SPEED SENSOR REMOVAL/INSTALLATION

DPE041343710W01

1. Remove the under cover (rear).
2. Remove in the order indicated in the table.
3. Install in the reverse order of removal.

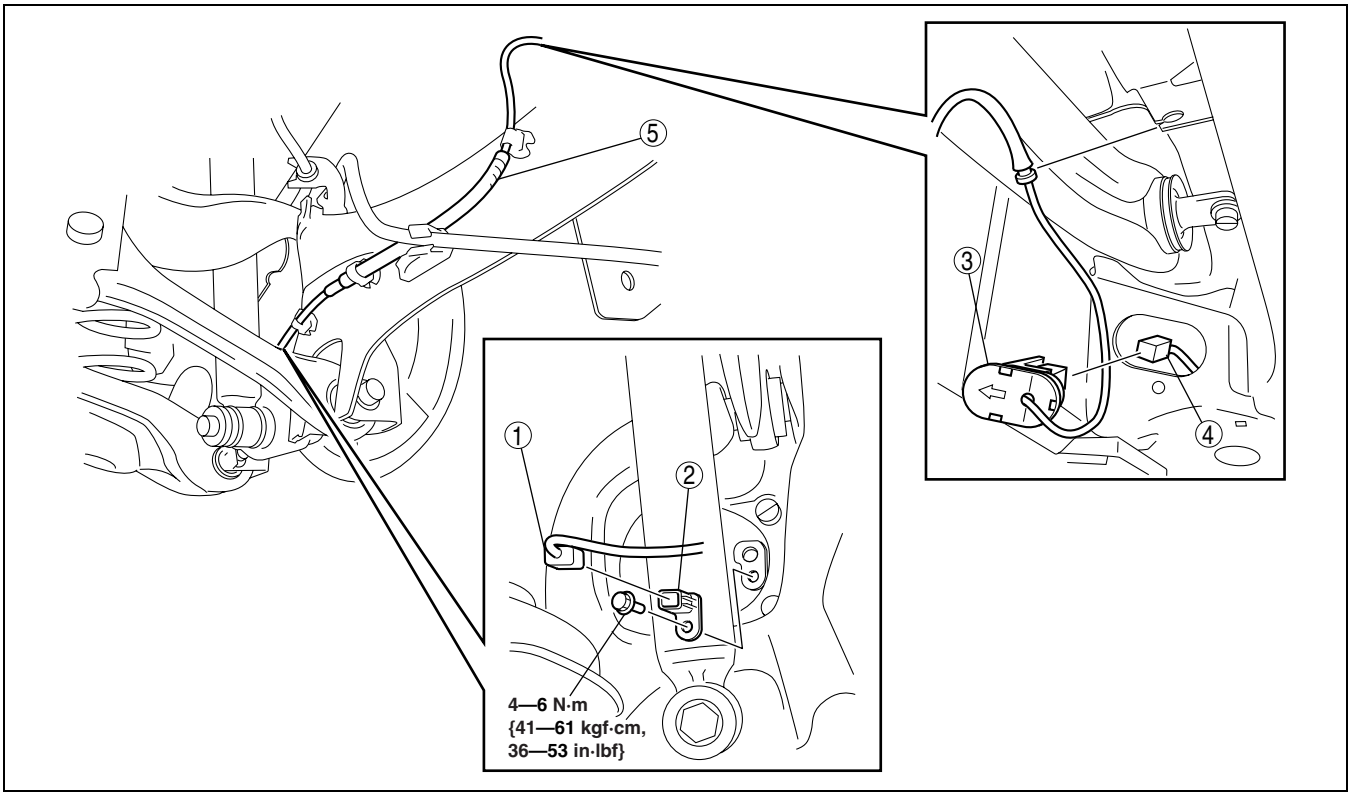

B3E0413W009

1	Connector
2	Rear ABS wheel-speed sensor
3	ABS hole cover (See 04–13–7 ABS Hole Cover Removal Note.) (See 04–13–8 ABS Hole Cover Installation Note.)

4	Connector
5	Rear ABS wheel-speed sensor wiring harness (See 04–13–8 Rear ABS Wheel-speed Sensor Wiring Harness Installation Note.)

ABS Hole Cover Removal Note

1. Disconnect the rear auto leveling sensor connector. (Vehicles with auto leveling sensor)

2. Press the tab of the ABS hole cover to separate the ABS hole cover from the body.
3. Remove the ABS hole cover from the body.

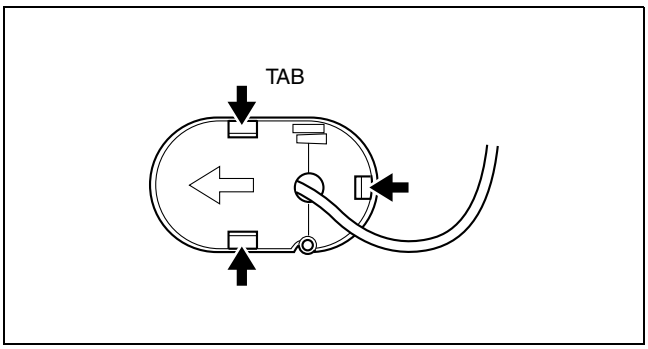

B3E0413W012

Rear ABS Wheel-speed Sensor Wiring Harness Installation Note

1. Pass the rear ABS wheel-speed sensor wiring harness outside the rear parking brake cable as shown in the figure.
2. Install the rear ABS wheel-speed sensor wiring harness.

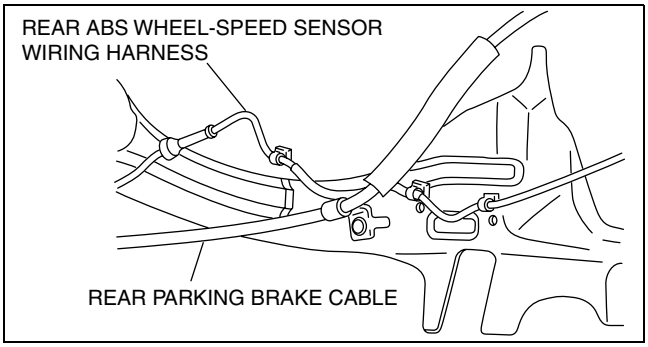

DPE412ZW1005

ABS Hole Cover Installation Note

1. Install the ABS hole cover into the body so that the arrow on it is facing toward the outer side of the vehicle.

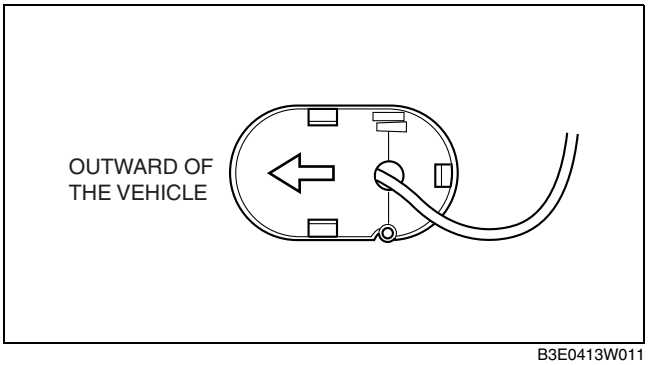

B3E0413W011

REAR ABS WHEEL-SPEED SENSOR INSPECTION

DPE041343710W02

Installation Visual Inspection

1. Inspect for the following:
   - If there is any malfunction, replace the part.
   (1) Excessive looseness or play of the ABS wheel-speed sensor
   (2) Deformation of the ABS wheel-speed sensor
   (3) Deformation or damage of the ABS sensor rotor

Clearance Inspection

1. Remove the rear ABS wheel-speed sensor.

2. Measure the distance between the rear ABS wheel-speed sensor installation surface and the ABS sensor rotor. This is dimension A.
3. Calculate the clearance between the rear ABS wheel-speed sensor and the ABS sensor rotor using the following formula:
   Clearance (mm {in}) = A –13.9 {0.547}
4. Verify that the clearance between the ABS sensor rotor and the rear ABS wheel-speed sensor is as indicated below.
   - If there is any malfunction, replace it.

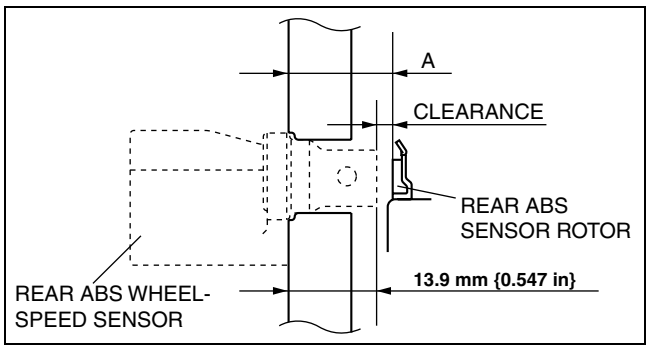

B3E0413W008

Clearance
1.46 mm {0.057 in} or less

Sensor Output Value Inspection

Caution
- **Resistance inspection using other testers may cause damage to the ABS wheel-speed sensor internal circuit. Be sure to use the WDS or equivalent to inspect the ABS wheel-speed sensor.**

1. Turn the ignition switch off.
2. Connect the WDS or equivalent to the DLC-2.
3. Select the following PIDs using the WDS or equivalent:
   - LR_WSPD
     (LR wheel-speed sensor)
   - RR_WSPD
     (RR wheel-speed sensor)
4. Start the engine and drive the vehicle.
5. Verify that the display of the WDS or equivalent shows the same value as the speedometer.
   - If there is any malfunction, replace the ABS wheel-speed sensor.

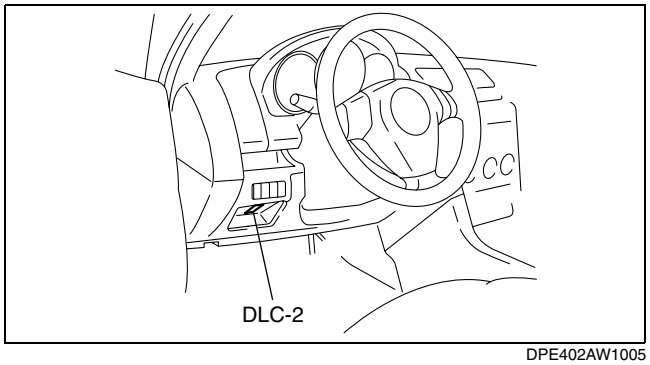

DPE402AW1005

04–50 TECHNICAL DATA

BRAKE TECHNICAL DATA 04–50–1

BRAKE TECHNICAL DATA

DPE045000000W01

Item	Specification
Brake fluid type	European (L.H.D. U.K.) specs.: SAE J1703, FMVSS 116 DOT-3 or DOT-4 General (L.H.D. R.H.D.) specs.: SAE J1703, FMVSS 116 DOT-3
Brake pedal height (reference value)	136 mm {5.35 in}
Brake pedal play	2.9—5.5 mm {0.12—0.21 in}
Brake pedal-to-floor clearance (Brake pedal when depressed at 147 N {15.0 kgf, 33.0 lbf})	94 mm {3.7 in} or more
Power brake unit fluid pressure when pedal depressed at 200 N {20.4kgf, 44.9lbt}	At 0 kpa {0 mmHg, 0 inHg}: 550 kPa {5.61 kgf/cm^2, 79.8 psi} or more
Power brake unit fluid pressure when pedal depressed at 200 N {20.4kgf, 44.9lbt}	At 66.7 kpa {500 mmHg, 19.7 inHg}: 6.950 kPa {70.88 kgf/cm^2, 1.009 psi} or more
Front disc plate runout limit	0.04 mm {0.0016 in}
Minimum front disc plate thickness	23 mm {0.91 in}
Minimum front disc pad thickness after machining using a brake lathe on-vehicle	23.8 mm {0.94 in}
Minimum front disc pad thickness	2.0 mm {0.079 in} min.
Rear disc plate runout limit	0.05 mm {0.002 in}
Minimum rear disc plate thickness	9 mm {0.35 in}
Minimum rear disc plate thickness after machining using a brake lathe on-vehicle	9.8 mm {0.39 in}
Minimum rear disc pad thickness	2.0 mm {0.079 in} min.
Parking brake lever stroke when pulled at 98 N {10 kgf, 22 lbf}	3—6 notches